OPERATIVE TECHNIQUE

centro nail

TARGETING YOUR NEEDS

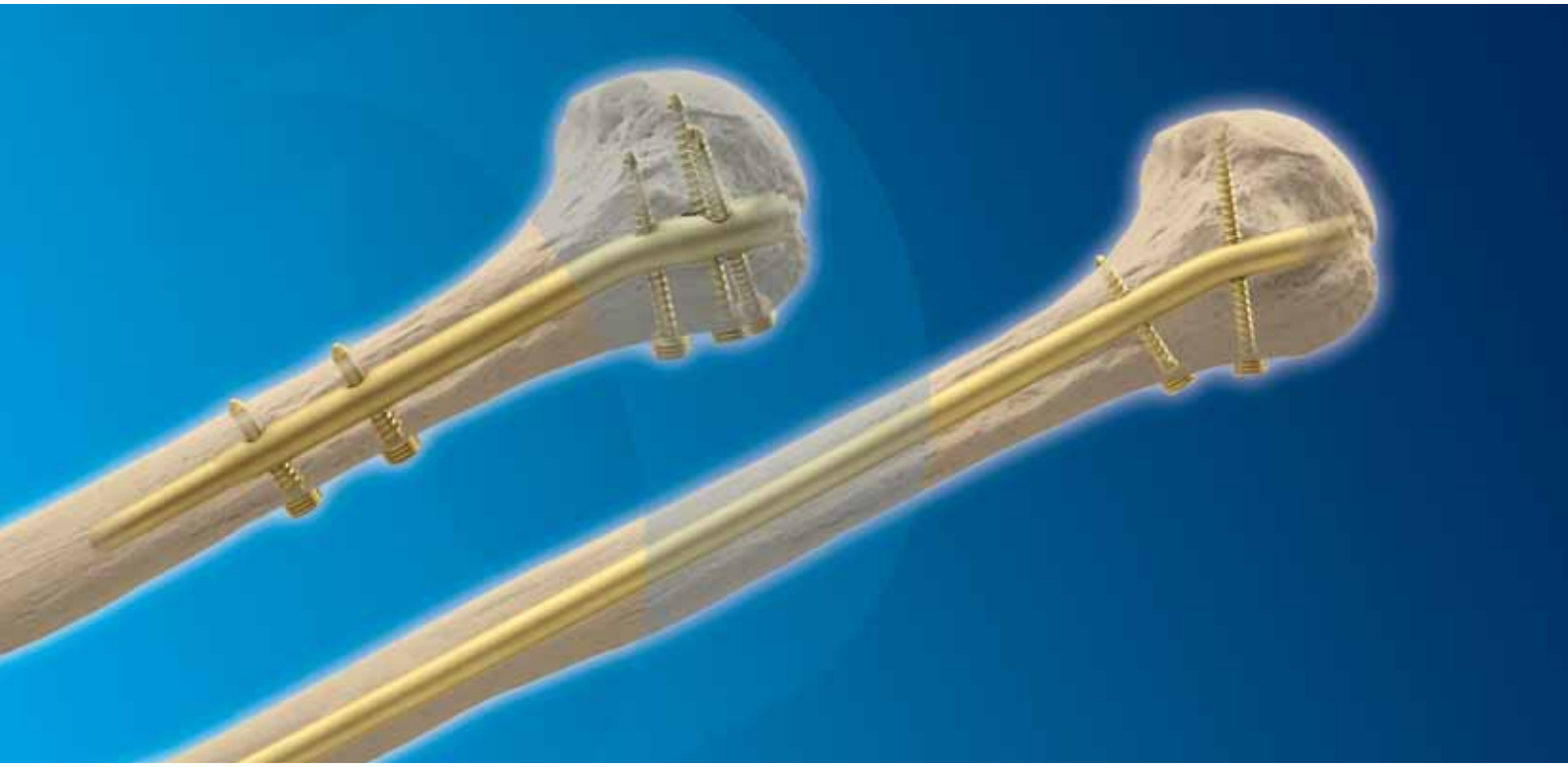

The Centronail Titanium Humeral Nailing System

ORTHOFIX®

Orthofix wishes to thank the following surgeons for their contribution to the development of the technique:

S. BERKI, MD
Department of General, Trauma and Hand Surgery,
University and County Hospital, Szentes, Hungary

DR. R. GIANCOLA
Orthopaedics Department,
San Carlo Hospital, Milan, Italy

M. MANCA, MD
Department of Trauma and Orthopaedics, “Versilia”
Hospital, Viareggio, Italy

FEATURES AND BENEFITS

PROXIMAL HUMERAL NAIL

SHORT
(150mm)

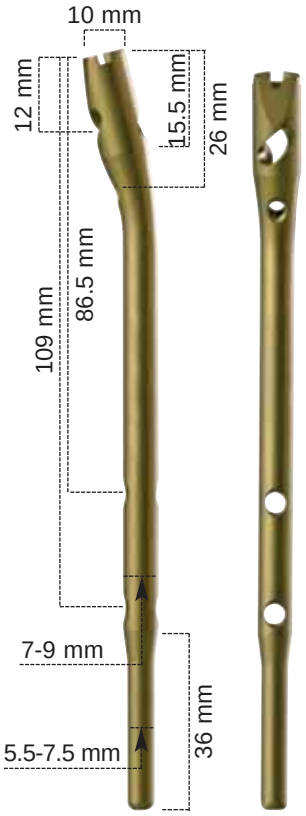

LONG
(185-320mm, 15 mm increments)

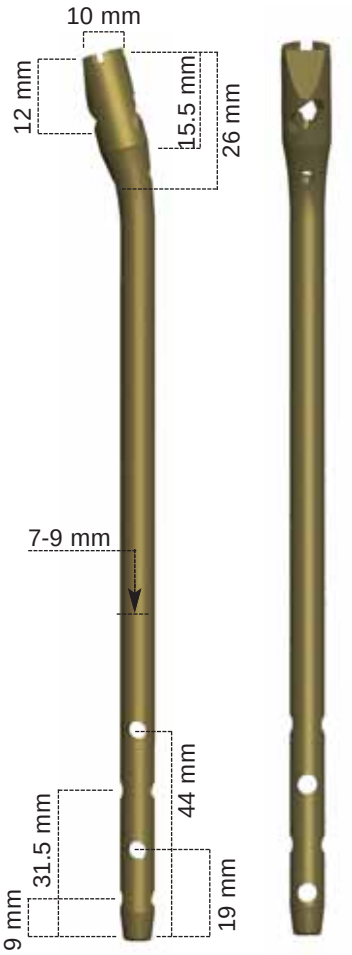

Titanium nail and locking screws
Allows MRI investigation, if necessary

10 mm proximal diameter

7-9 mm distal diameter

One design for Left and Right humerus

Proximal bend 15°

DIAPHYSEAL HUMERAL NAIL

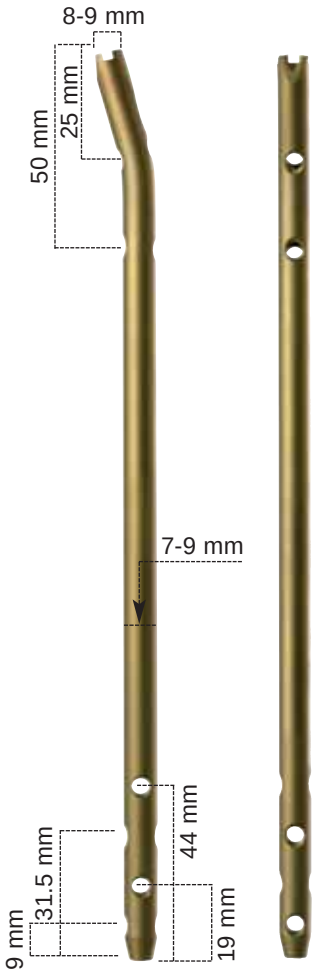

Titanium nail and locking screws
Allows MRI investigation, if necessary

7-9 mm diameter
In the 7 mm nail, the proximal 25 mm is 8 mm in diameter

One design for Left and Right humerus
Antegrade and retrograde insertion

185-320 mm long (15 mm increments)

Proximal bend 15°

Proximal locking

PROXIMAL HUMERAL NAIL

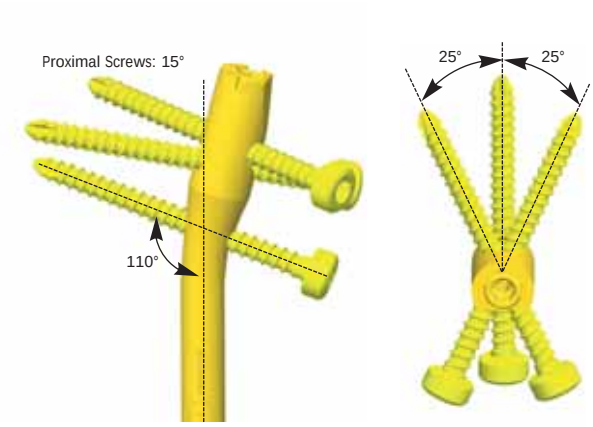

End caps

End caps function as set-screw to prevent proximal locking screw loosening.

DIAPHYSEAL HUMERAL NAIL

Antegrade

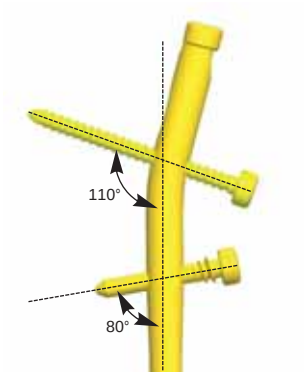

Retrograde

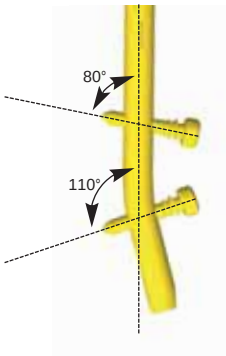

Locking screws

TITANIUM STANDARD LOCKING SCREWS

6.0 mm thread diameter
4.0 mm shaft diameter

TITANIUM REVISION LOCKING SCREWS

8 mm thread diameter
Better purchase in poor quality bone
4.0 mm shaft diameter

Smooth diameter, unthreaded shaft: Maximises fatigue strength
Reverse thread on screw head: Easy screw removal
Conical tip: Helps insertion

TITANIUM THREADED LOCKING SCREWS

Fully threaded shaft: Improves purchase in cancellous bone near articular surface.
Reverse thread on screw head: Easy screw removal
Conical tip: Helps insertion

TITANIUM PROXIMAL THREADED LOCKING SCREWS

To be used only in the humeral head.
Improves purchase in osteoporotic bone.
The low profile of the locking screw head reduces the risk of muscle impingement or interference.

INDICATIONS

PROXIMAL HUMERAL NAIL

- Proximal Fractures
- Non-Union
- Mal-Union
- Pathological Fractures

DIAPHYSEAL HUMERAL NAIL

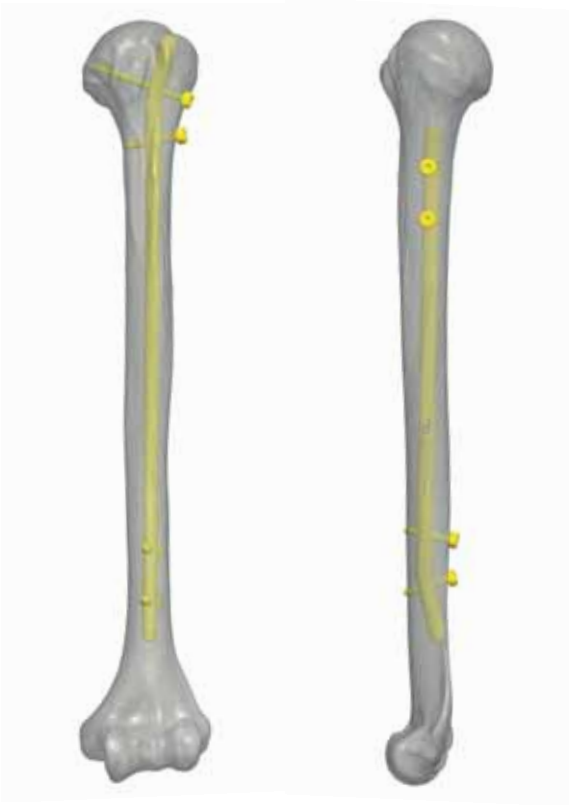

- Diaphyseal Fractures
- Non-Union
- Mal-Union
- Pathological Fractures

EQUIPMENT REQUIRED

Centronail Titanium Proximal Humeral Nail		
Ø 7 L 150 mm	Cannulated	99-T787150
Ø 8 L 150 mm	Cannulated	99-T788150
Ø 9 L 150 mm	Cannulated	99-T789150
Ø 7 L 185 mm	Cannulated	99-T787185PL
Ø 7 L 200 mm	Cannulated	99-T787200PL
Ø 7 L 215 mm	Cannulated	99-T787215PL
Ø 7 L 230 mm	Cannulated	99-T787230PL
Ø 7 L 245 mm	Cannulated	99-T787245PL
Ø 7 L 260 mm	Cannulated	99-T787260PL
Ø 7 L 275 mm	Cannulated	99-T787275PL
Ø 7 L 290 mm	Cannulated	99-T787290PL
Ø 7 L 305 mm	Cannulated	99-T787305PL
Ø 7 L 320 mm	Cannulated	99-T787320PL
Ø 8 L 185 mm	Cannulated	99-T788185PL
Ø 8 L 200 mm	Cannulated	99-T788200PL
Ø 8 L 215 mm	Cannulated	99-T788215PL
Ø 8 L 230 mm	Cannulated	99-T788230PL
Ø 8 L 245 mm	Cannulated	99-T788245PL
Ø 8 L 260 mm	Cannulated	99-T788260PL
Ø 8 L 275 mm	Cannulated	99-T788275PL
Ø 8 L 290 mm	Cannulated	99-T788290PL
Ø 8 L 305 mm	Cannulated	99-T788305PL
Ø 8 L 320 mm	Cannulated	99-T788320PL
Ø 9 L 185 mm	Cannulated	99-T789185PL
Ø 9 L 200 mm	Cannulated	99-T789200PL
Ø 9 L 215 mm	Cannulated	99-T789215PL
Ø 9 L 230 mm	Cannulated	99-T789230PL
Ø 9 L 245 mm	Cannulated	99-T789245PL
Ø 9 L 260 mm	Cannulated	99-T789260PL
Ø 9 L 275 mm	Cannulated	99-T789275PL
Ø 9 L 290 mm	Cannulated	99-T789290PL
Ø 9 L 305 mm	Cannulated	99-T789305PL
Ø 9 L 320 mm	Cannulated	99-T789320PL

Centronail Titanium Humeral Nail		
Ø 7 L 185 mm	Cannulated	99-T787185
Ø 7 L 200 mm	Cannulated	99-T787200
Ø 7 L 215 mm	Cannulated	99-T787215
Ø 7 L 230 mm	Cannulated	99-T787230
Ø 7 L 245 mm	Cannulated	99-T787245
Ø 7 L 260 mm	Cannulated	99-T787260
Ø 7 L 275 mm	Cannulated	99-T787275
Ø 7 L 290 mm	Cannulated	99-T787290
Ø 7 L 305 mm	Cannulated	99-T787305
Ø 7 L 320 mm	Cannulated	99-T787320
Ø 8 L 185 mm	Cannulated	99-T788185
Ø 8 L 200 mm	Cannulated	99-T788200
Ø 8 L 215 mm	Cannulated	99-T788215
Ø 8 L 230 mm	Cannulated	99-T788230
Ø 8 L 245 mm	Cannulated	99-T788245
Ø 8 L 260 mm	Cannulated	99-T788260
Ø 8 L 275 mm	Cannulated	99-T788275
Ø 8 L 290 mm	Cannulated	99-T788290
Ø 8 L 305 mm	Cannulated	99-T788305
Ø 8 L 320 mm	Cannulated	99-T788320
Ø 9 L 185 mm	Cannulated	99-T789185
Ø 9 L 200 mm	Cannulated	99-T789200
Ø 9 L 215 mm	Cannulated	99-T789215
Ø 9 L 230 mm	Cannulated	99-T789230
Ø 9 L 245 mm	Cannulated	99-T789245
Ø 9 L 260 mm	Cannulated	99-T789260
Ø 9 L 275 mm	Cannulated	99-T789275
Ø 9 L 290 mm	Cannulated	99-T789290
Ø 9 L 305 mm	Cannulated	99-T789305
Ø 9 L 320 mm	Cannulated	99-T789320

End Caps	
L 0 mm	99-T780000
L 5 mm	99-T780005
L 10 mm	99-T780010

4.0 mm Titanium Threaded Locking Screws	
99-T786020	20 mm
99-T786025	25 mm
99-T786030	30 mm
99-T786035	35 mm
99-T786040	40 mm
99-T786045	45 mm
99-T786050	50 mm
99-T786055	55 mm
99-T786060	60 mm
99-T786065	65 mm
99-T786070	70 mm
99-T786075	75 mm
99-T786080	80 mm

4.0 mm Titanium Proximal Threaded Locking Screws*	
99-T784030	30 mm
99-T784035	35 mm
99-T784040	40 mm
99-T784045	45 mm
99-T784050	50 mm
99-T784055	55 mm
99-T784060	60 mm
99-T784065	65 mm

**not available in all markets*

4.0 mm Titanium Locking Screw	
99-T74420	20 mm
99-T74425	25 mm
99-T74430	30 mm
99-T74435	35 mm
99-T74440	40 mm
99-T74445	45 mm
99-T74450	50 mm
99-T74455	55 mm
99-T74460	60 mm
99-T74465	65 mm
99-T74470	70 mm
99-T74475	75 mm
99-T74480	80 mm

4.0 mm Titanium Revision Locking Screw	
99-T785020	20 mm
99-T785025	25 mm
99-T785030	30 mm
99-T785035	35 mm
99-T785040	40 mm
99-T785045	45 mm
99-T785050	50 mm
99-T785055	55 mm
99-T785060	60 mm
99-T785065	65 mm
99-T785070	70 mm
99-T785075	75 mm
99-T785080	80 mm

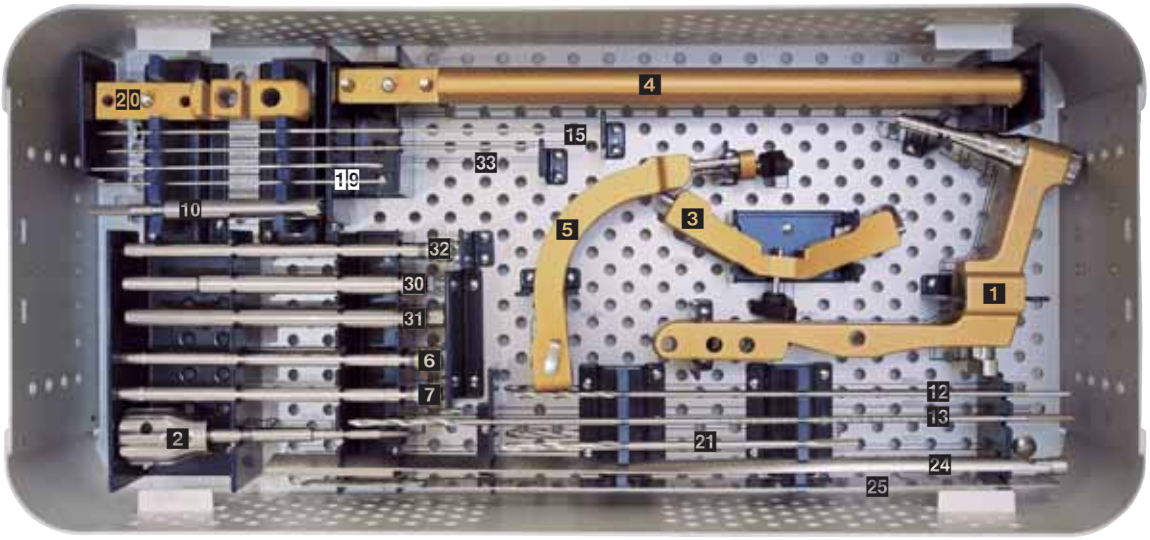

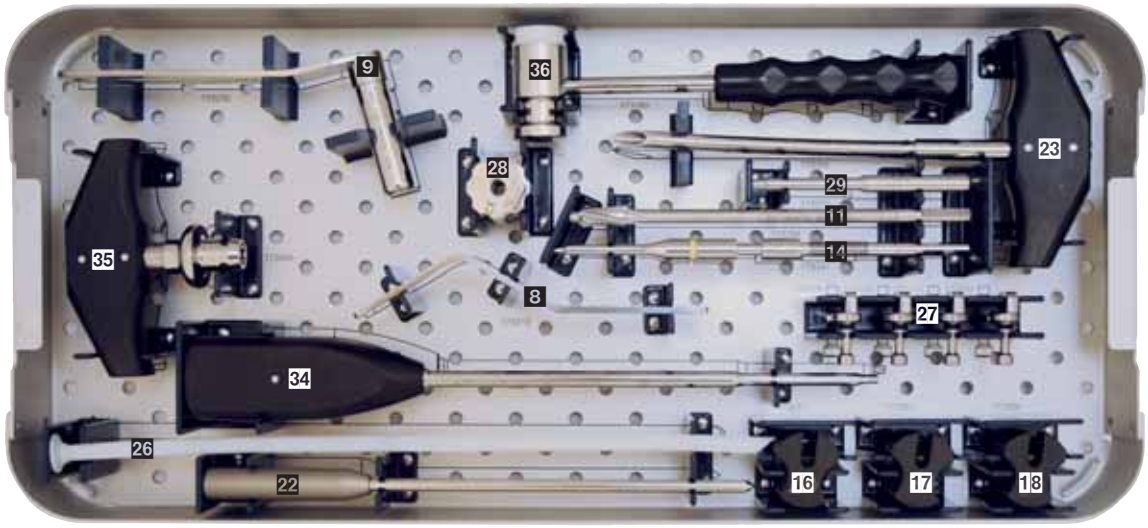

HUMERAL SPECIFIC INSTRUMENTS BOX			
1) Handle	178100	21) Drill Bit 4.8 mm	1100101
2) Locking Rod	178110	22) Trocar	11129
3) Proximal Humeral Outrigger	178120	23) Awl	178265
4) Guide Bar	178130	24) Ruler Support	173276
5) Targeting Arm	178170	25) Humeral Ruler	178275
6) Drill Guide 3.2 mm	178213	26) Guide Wire Exchange Tube	178353
7) Drill Guide 4.0 mm	174213	27) Locking Cam	173026
8) Retrograde Insertion Template	178215	28) Locking Nut	173032
9) Humeral Reaming Sleeve	178230	29) Impactor	173071
10) Antegrade Cannulated Reamer	178261	30) Stabilizing Sleeve	173201
11) Retrograde Insertion Drill	178284	31) Screw Guide	173211
12) Drill Bit d. 3.2x280 mm	178286	32) Trocar	173212
13) Drill Bit d. 4.0x365 mm	174286	33) K-Wire 2x220 mm	173287
14) Stabilizing Rod	178041	34) Cannulated Screw Driver	173320
15) Antegrade Insertion Wire d. 2x250 mm	178287	35) T Handle	173350
16) Spacer 7 mm	173058	36) Hammer	173380
17) Spacer 8 mm	173051	**STERILE PACKAGED INSTRUMENTS**	
18) Spacer 9 mm	173052	37) Guide Wire with olive 2x780 mm	99-178283
19) K-Wire without olive d. 2x150 mm	11146	38) Guide Wire without olive 2.5x780 mm	99-178282
20) Radiolucent Distal Adapter	178160	39) 6 mm Cannulated Drill Bit Kit	99-178285

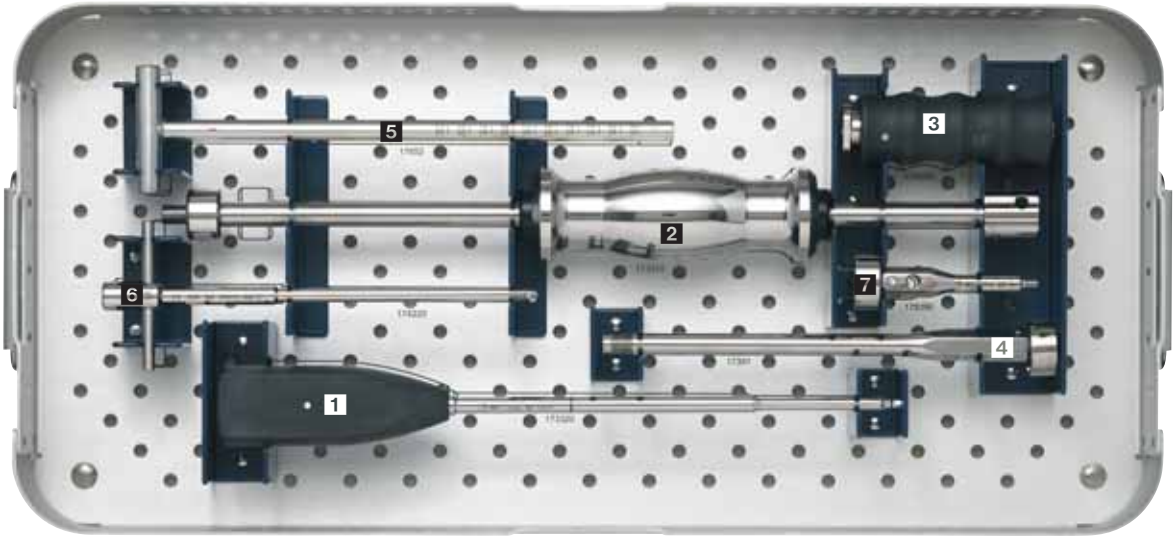

EXTRACTION INSTRUMENTS BOX			
1) Cannulated Screw Driver	173320	5) Locking Screw Extractor	17652
2) Sliding Hammer	173370	6) Tibial Nail Extractor	174220
3) Extractor Handle	170035	7) Humeral Nail Extractor	178390
4) Femoral Nail Extractor	17391		

INSTRUMENTS BOXES			
Centronail Humeral Instruments Box, empty	178991	Centronail Humeral Instruments Complete	178901
Centronail Humeral Instruments Box, complete	178991-1	*1 x Extraction Instruments Box, complete*	
Centronail Extraction Instruments, complete	173996-1	*1 x Humeral Specific Instruments Box, complete*	

Cleaning, disinfection, sterilisation and maintainance of instrumentation

Orthofix supplies the Centronail Titanium Universal Humeral Nail, locking screws and end caps in a STERILE package, while the instruments are supplied NON-STERILE. Please check the sterility of each device on the product label.

The surgeon must check that the package has not been damaged and has not expired. The instruments are supplied in a non-sterile state and therefore must be cleaned before use, as described for new products. The whole cleaning, disinfection and sterilisation cycle must be followed before each use, as described in the instructions for use PQ ISP.

N.B. Disassemble all instruments for thorough cleaning and disinfection prior to sterilization.

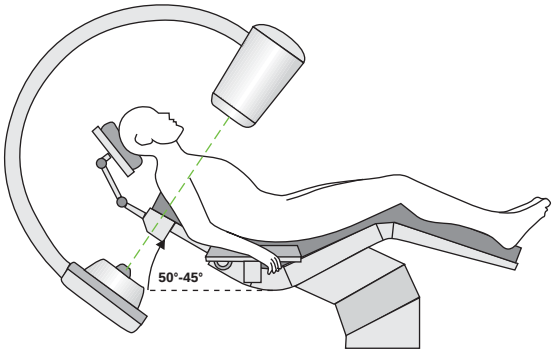

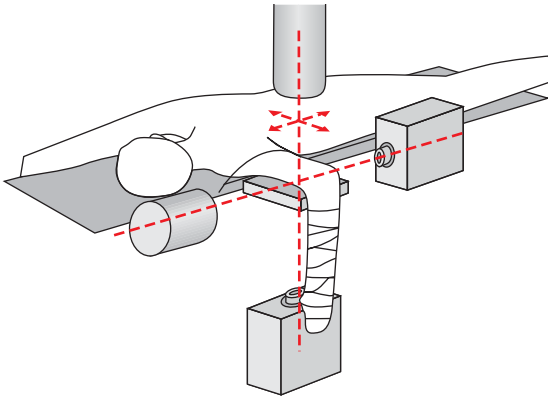

OPERATIVE TECHNIQUE

Patient Positioning

Standard X-rays should be taken. In proximal fractures, a CT-scan will help to identify the size and position of the fragments. Nail length and diameter are determined by assessing the extent of the fracture and by measuring the medullary canal. Positioning of the Nail Locking Screws should be included in the planning.

Antegrade Insertion
The patient should be positioned in a beach chair position. The humerus should be freely mobile on the side of the operating table with an unobstructed image intensifier view.

Retrograde Insertion
The patient is placed on a radiolucent table in the prone position. The arm is supported on an arm board or hand table. The shoulder is in 90° abduction, the elbow joint flexed in a 90° position. Make sure that the elbow can be flexed by 120° to avoid impingement at the level of the olecranon. Patient positioning should be checked to ensure that imaging of the entry point is possible in both planes. Good visualisation of the proximal humerus is also important for locking of the nail in the proximal end.

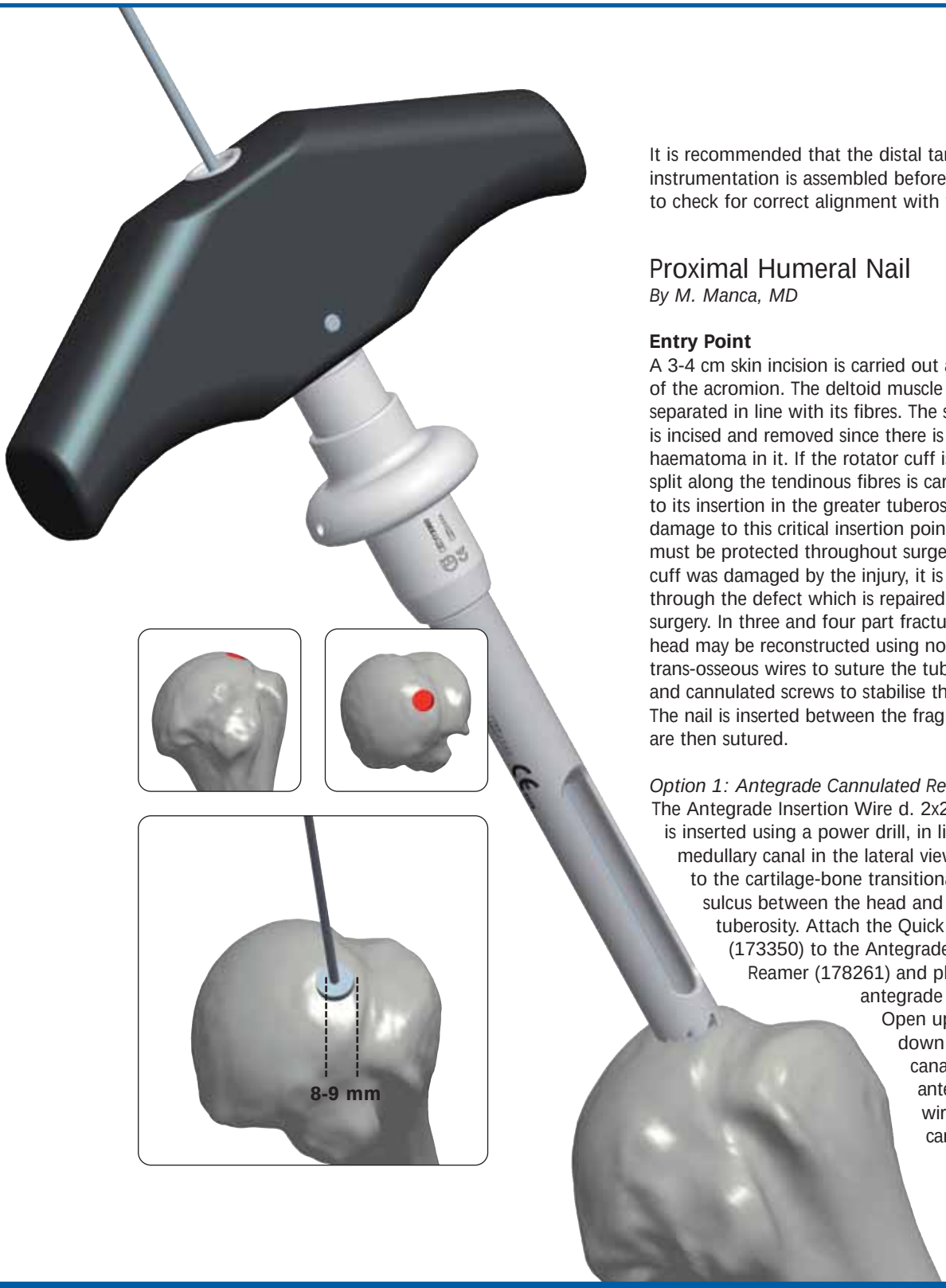

It is recommended that the distal targeting instrumentation is assembled before nail insertion to check for correct alignment with the nail.

Proximal Humeral Nail

By M. Manca, MD

Entry Point

A 3-4 cm skin incision is carried out at the anterior part of the acromion. The deltoid muscle should be separated in line with its fibres. The subacromial bursa is incised and removed since there is often an haematoma in it. If the rotator cuff is intact, a 1.5 cm split along the tendinous fibres is carried out medially to its insertion in the greater tuberosity to avoid damage to this critical insertion point. The rotator cuff must be protected throughout surgery. If the rotator cuff was damaged by the injury, it is possible to go through the defect which is repaired at the end of surgery. In three and four part fractures, the humeral head may be reconstructed using non-absorbable trans-osseous wires to suture the tuberosities or K-wires and cannulated screws to stabilise the fragments. The nail is inserted between the fragments which are then sutured.

Option 1: Antegrade Cannulated Reamer

The Antegrade Insertion Wire d. 2x250 mm (178287) is inserted using a power drill, in line with the medullary canal in the lateral view 8-9 mm medial to the cartilage-bone transitional zone at the sulcus between the head and the greater tuberosity. Attach the Quick Connect T-Handle (173350) to the Antegrade Cannulated Reamer (178261) and place over the antegrade insertion wire. Open up the entry point down to the medullary canal. Remove the antegrade insertion wire and the cannulated reamer.

178287
Antegrade
Insertion Wire

173350
Quick Connect
T-Handle

178261
Antegrade
Cannulated Reamer

Option 2: Cannulated Awl
Make the entry point with the Awl (178265). The Guide Wire with Olive (99-178283) is inserted through the awl down the medullary canal. **Use image intensification when passing the fracture.**

INSTRUMENTATION

178265
Awl

99-178283
Guide Wire
with olive
2x780 mm

Short Proximal Humeral Nail

Nail Insertion
Insert the Locking Rod (178110) into the back of the Handle (178100) and the nail of correct diameter into the nail support. Tighten the locking rod using the Impactor (173071) inserted in the holes in the locking rod.

Under image intensification, insert the nail using gentle manoeuvres avoiding bending between the nail and the handle. Always ensure that the proximal end of the nail is at least 4 mm below the bone surface.

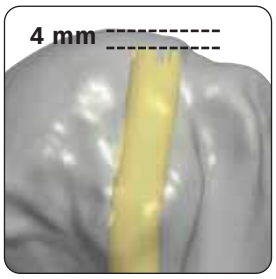

178110
Locking Rod

178100
Handle

173071
Impactor

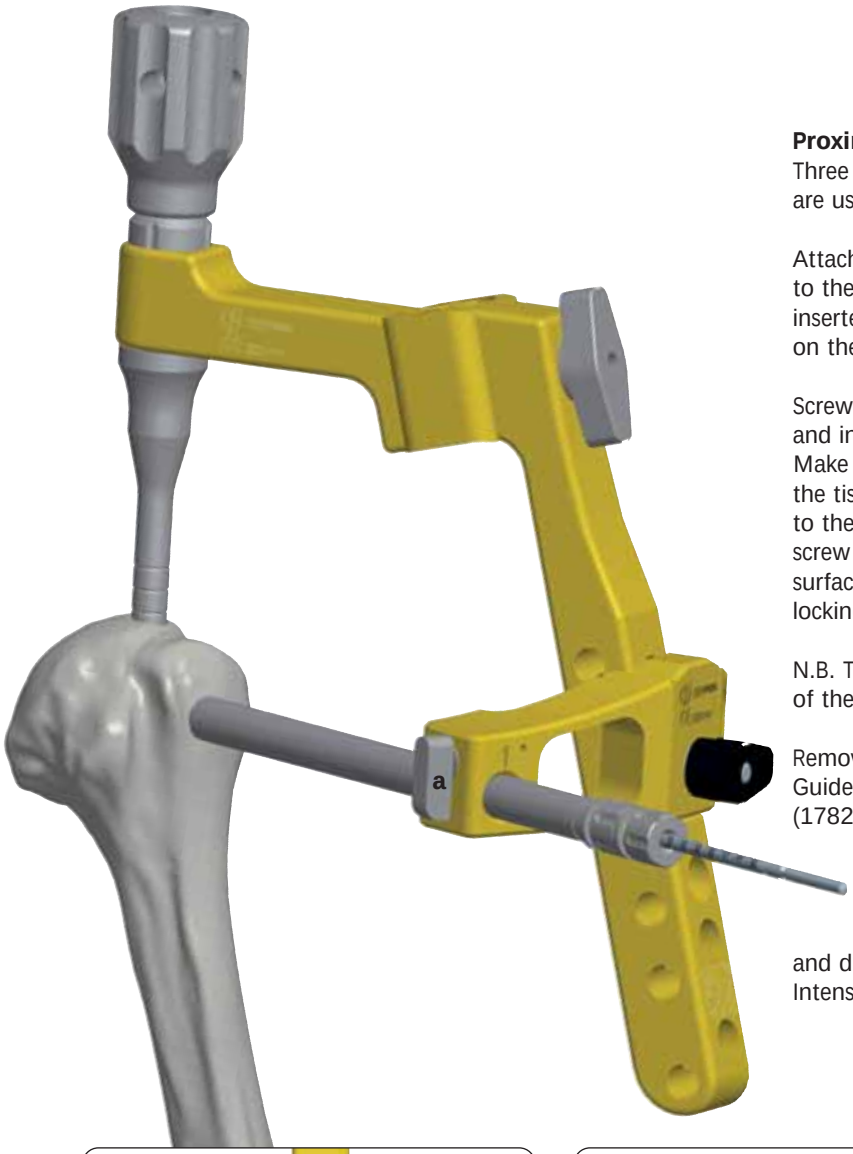

Proximal Locking
Three 4.0 mm titanium fully threaded locking screws are used for proximal locking in the humeral head.

Attach the Proximal Humeral Outrigger (178120) to the handle. The two most proximal screws are inserted first following the numerical order marked on the proximal humeral outrigger.

Screw a Trocar (173212) into a Screw Guide (173211) and insert them together into the hole marked “1”. Make a stab incision where they touch the skin, split the tissues down to the bone, and push them down to the bone. Unscrew the trocar and advance the screw guide until it is sitting flush against the bone surface. Tighten the screw guide in place with the locking cam (a).

N.B. The surgeon should be aware of the position of the axillary nerve during this procedure.

Remove the trocar and screw in the 3.2 mm Drill Guide (178213). Drill with the 3.2 mm Drill Bit (178286), ensuring that the drill does not penetrate the articular surface. The screw length required is read from the scale on the drill bit immediately above the top of the drill guide (see inset). It is advisable to position the drill bit and drill guide exactly at right angles to the image Intensifier.

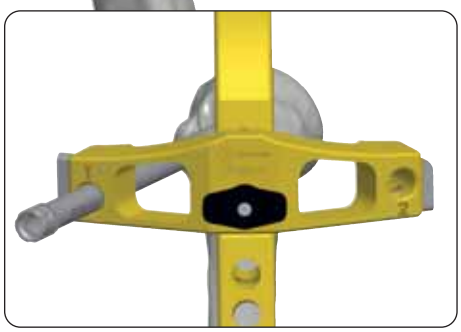

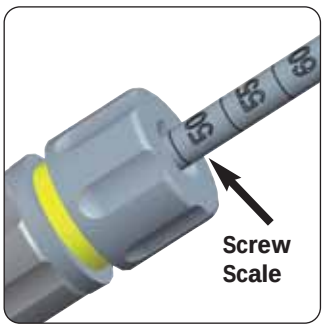

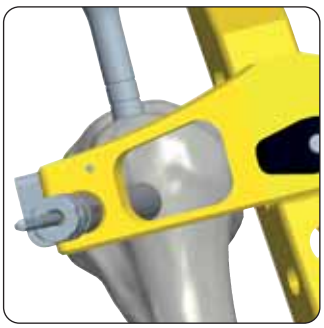

INSTRUMENTATION

178120
Proximal Humeral Outrigger

173212
Trocar

173211
Screw Guide

178213
3.2 mm Drill Guide

178286
3.2 mm Drill Bit

The drill bit is then removed and the correct fully threaded 4.0 mm screw inserted, using the 3.5 mm Cannulated Screw Driver (173320).

Repeat the procedure for the second interlocking screw inserted through the hole in the outrigger marked “2”.

Check its correct position on the medial side.

A third fully threaded 4.0 mm locking screw is inserted into the humeral head in the same way as described above. This locking hole is targeted using the hole in the handle, immediately distal to the proximal humeral outrigger.

This screw is inserted obliquely and, if it crosses the fracture line below the humeral head, it is advisable to externally rotate the distal humerus about 30° before drilling to reduce risk of rotational deformities.

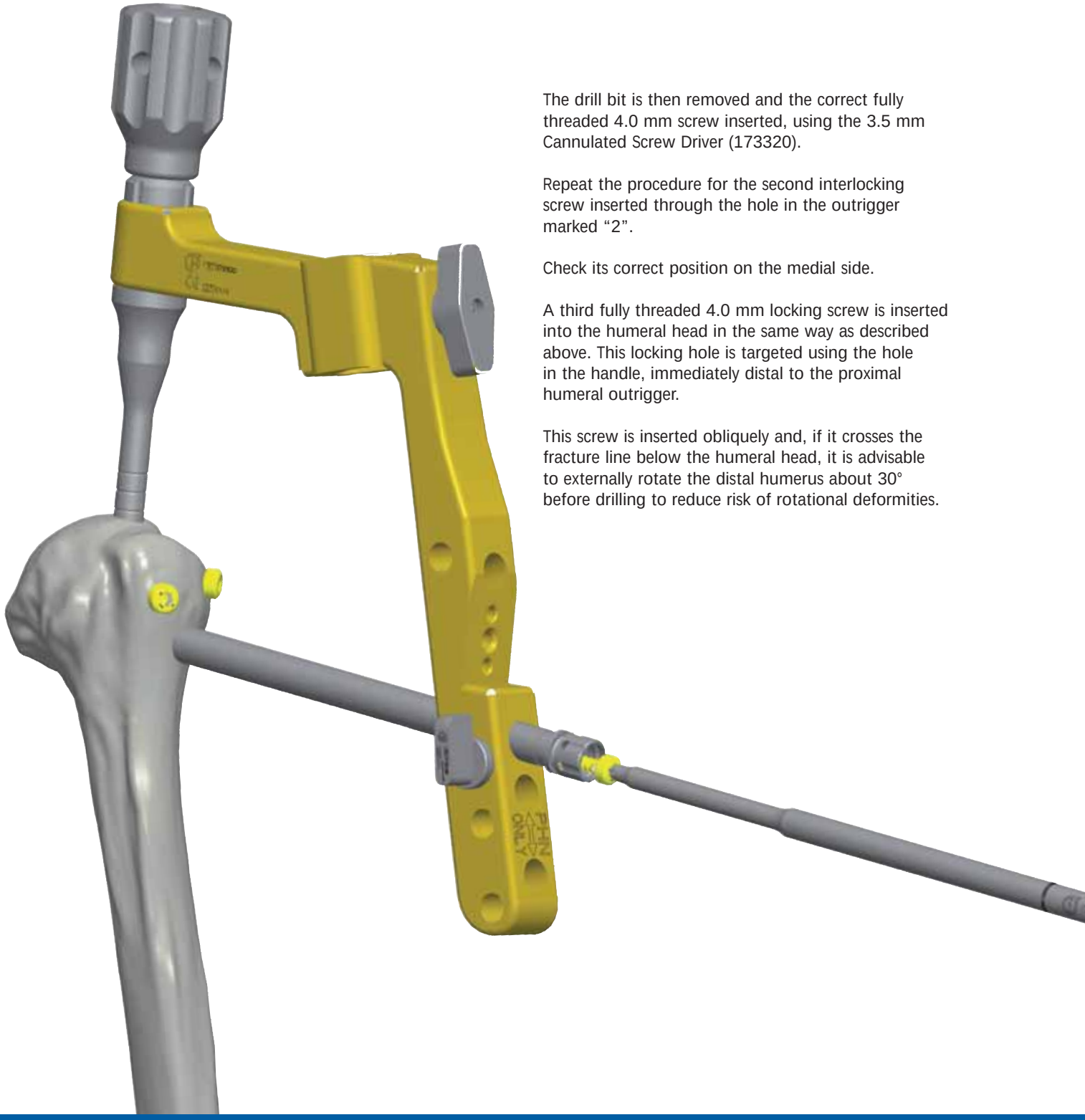

173320
3.5 mm
Cannulated
Screw Driver

173026
Locking Cam

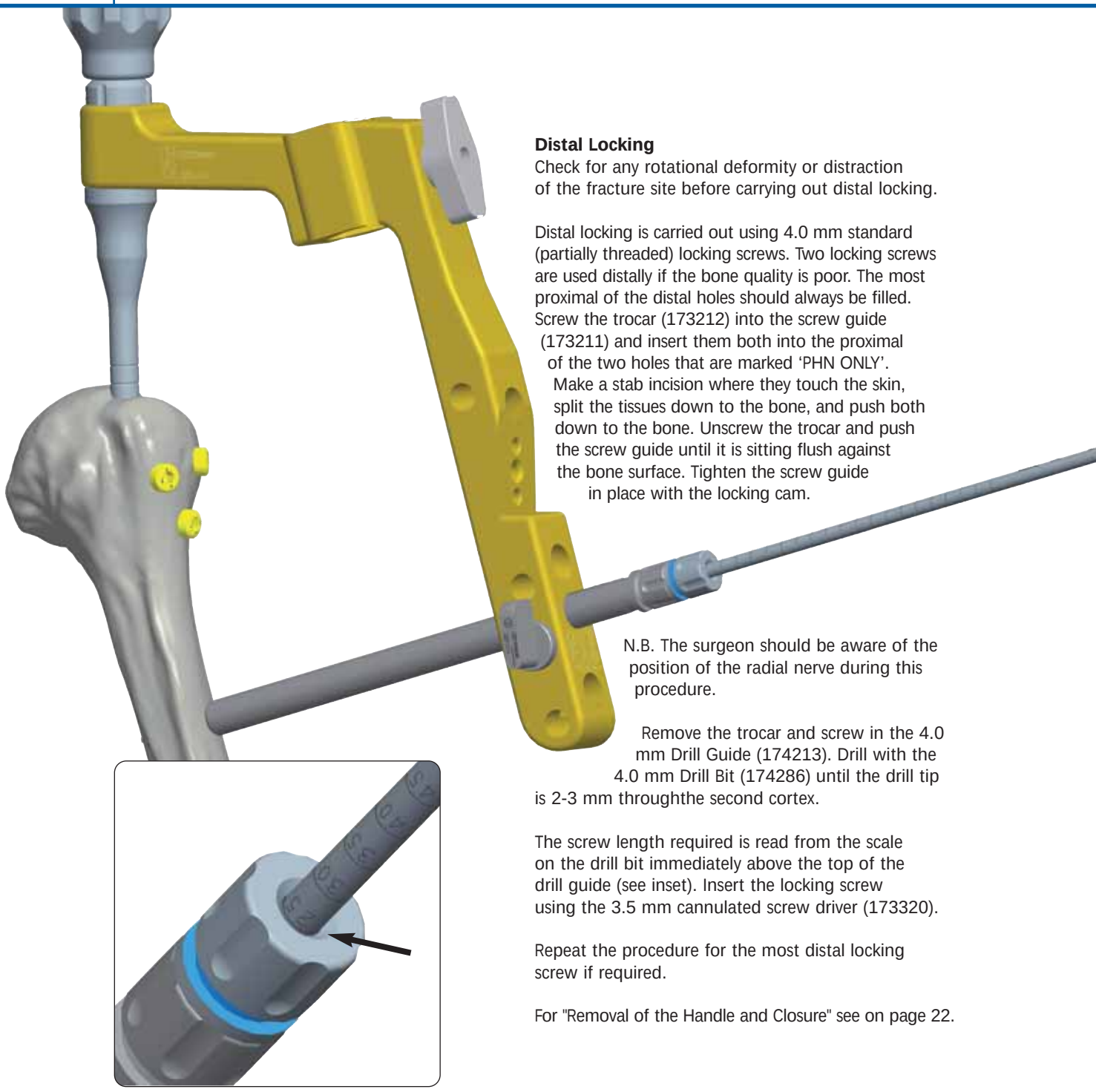

Distal Locking
Check for any rotational deformity or distraction of the fracture site before carrying out distal locking.

Distal locking is carried out using 4.0 mm standard (partially threaded) locking screws. Two locking screws are used distally if the bone quality is poor. The most proximal of the distal holes should always be filled. Screw the trocar (173212) into the screw guide (173211) and insert them both into the proximal of the two holes that are marked 'PHN ONLY'. Make a stab incision where they touch the skin, split the tissues down to the bone, and push both down to the bone. Unscrew the trocar and push the screw guide until it is sitting flush against the bone surface. Tighten the screw guide in place with the locking cam.

N.B. The surgeon should be aware of the position of the radial nerve during this procedure.

Remove the trocar and screw in the 4.0 mm Drill Guide (174213). Drill with the 4.0 mm Drill Bit (174286) until the drill tip is 2-3 mm throughthe second cortex.

The screw length required is read from the scale on the drill bit immediately above the top of the drill guide (see inset). Insert the locking screw using the 3.5 mm cannulated screw driver (173320).

Repeat the procedure for the most distal locking screw if required.

For "Removal of the Handle and Closure" see on page 22.

INSTRUMENTATION

174213
4.0 mm
Drill Guide

174286
4.0 mm
Drill Bit

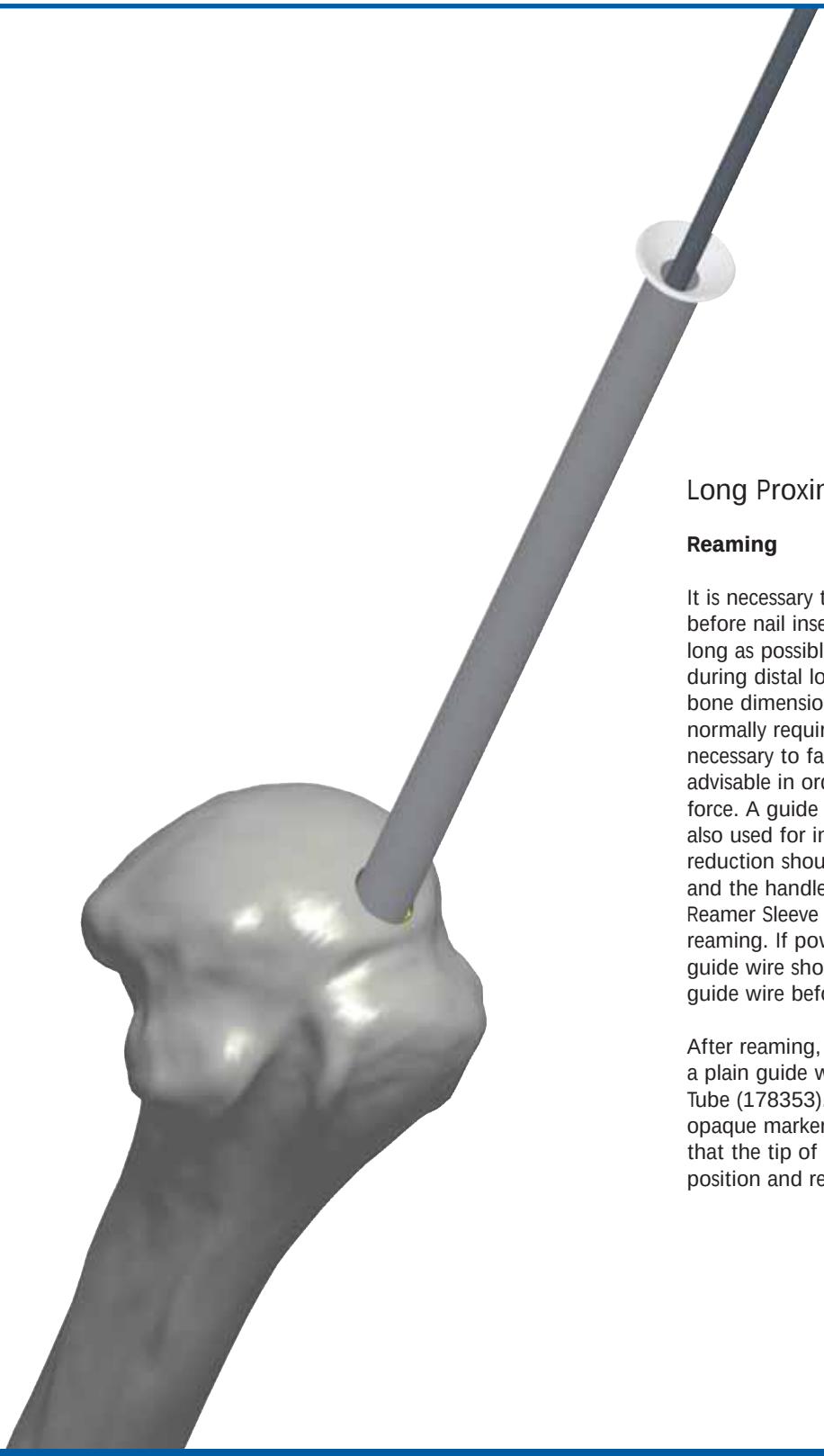

Long Proximal Humeral Nail

Reaming

It is necessary to ream the distal part of the humerus before nail insertion. The chosen nail should be as long as possible to prevent damage to the radial nerve during distal locking. This decision will depend on bone dimensions and quality. Over-reaming is not normally required, but an additional 0.5 mm may be necessary to facilitate insertion. Reaming is always advisable in order to insert the nail easily without force. A guide wire with olive should be inserted and also used for initial fracture reduction. Fracture reduction should not be accomplished with the nail and the handle as leverage arm. Use the Humeral Reamer Sleeve (178230) to protect soft tissues when reaming. If power reaming is required, the olive-tipped guide wire should be used and exchanged for a plain guide wire before nail insertion.

After reaming, replace the guide wire with olive with a plain guide wire, using the Guide Wire Exchange Tube (178353). Check the position of the radio opaque marker under image intensification. Confirm that the tip of the plain guide wire is in the correct position and remove the Plastic Exchange Tube.

178353
Guide Wire
Exchange Tube

178230
Humeral Reaming
Sleeve

99-178283
Guide Wire
with olive
2x780 mm

99-178282
Guide Wire
without olive
2.5x780 mm

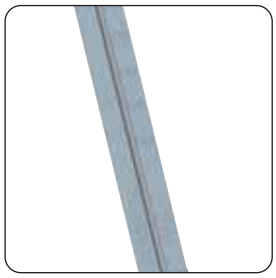

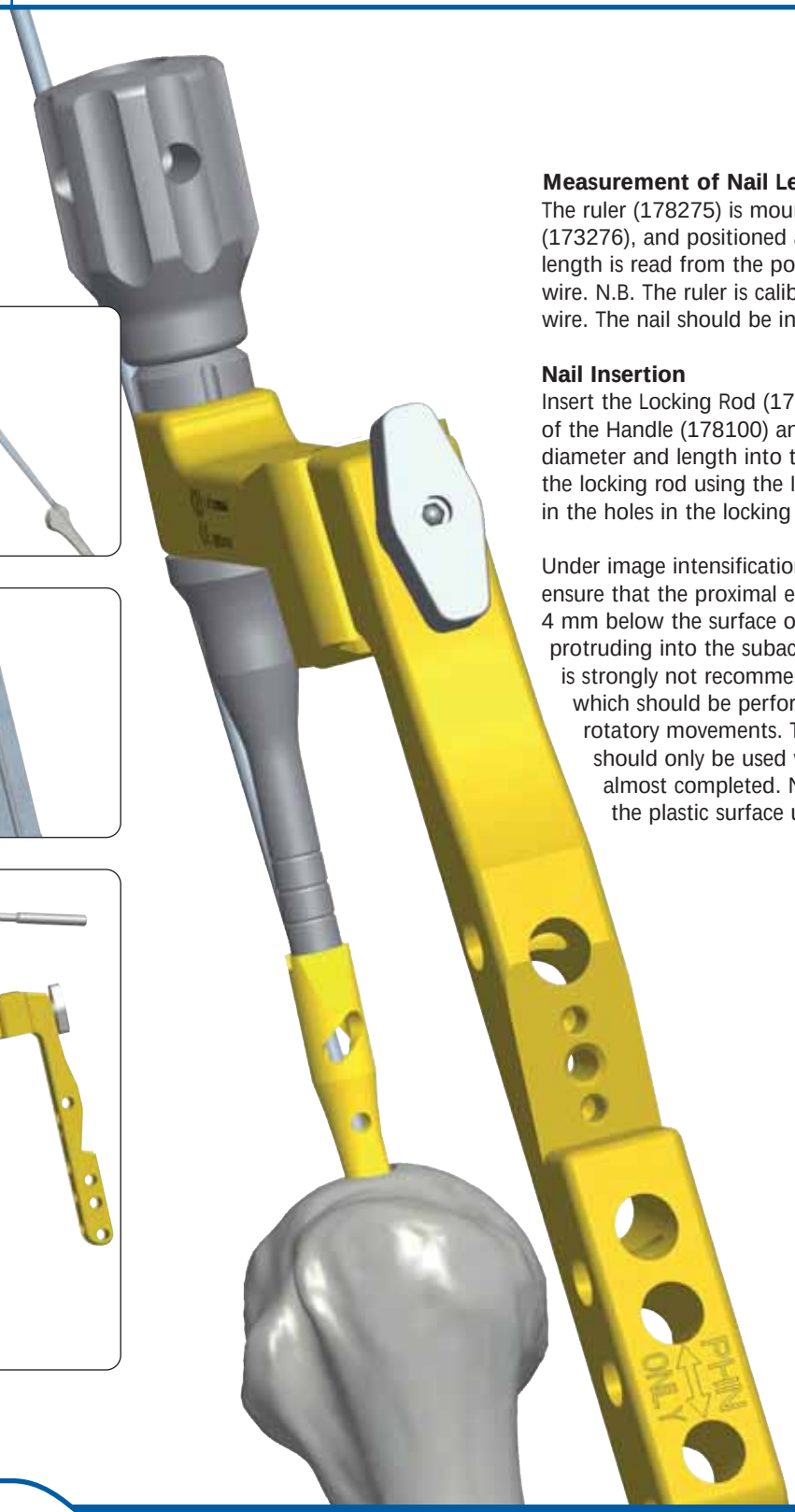

Measurement of Nail Length
The ruler (178275) is mounted in the ruler support (173276), and positioned at the entry portal. The nail length is read from the position of the tip of the guide wire. N.B. The ruler is calibrated for a 780 mm guide wire. The nail should be inserted as distally as possible.

Nail Insertion
Insert the Locking Rod (178110) into the back of the Handle (178100) and the nail of correct diameter and length into the nail support. Tighten the locking rod using the Impactor (173071) inserted in the holes in the locking rod.

Under image intensification, insert the nail. Always ensure that the proximal end of the nail is about 4 mm below the surface of the humeral head without protruding into the subacromial zone. Hammering is strongly not recommended during nail insertion which should be performed by pushing and rotatory movements. The hammer (173380) should only be used when insertion of the nail is almost completed. Note: Hammer gently with the plastic surface until the nail is fully inserted.

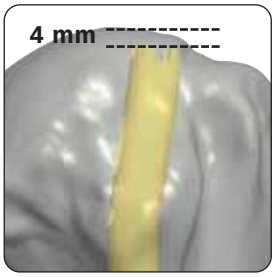

INSTRUMENTATION

178275
Humeral Ruler

173276
Ruler Support

178110
Locking Rod

178100
Handle

173071
Impactor

173380
Hammer

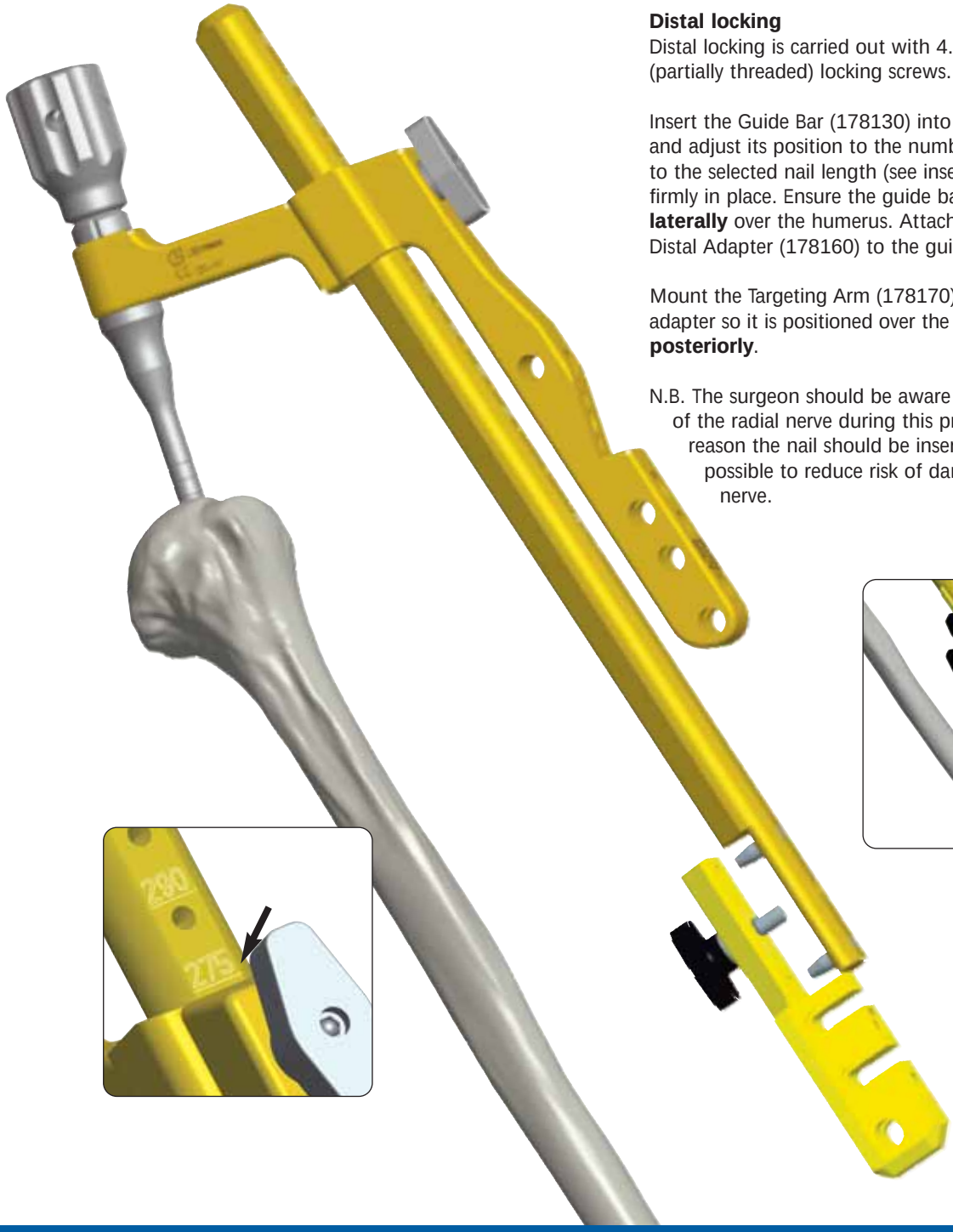

Distal locking
Distal locking is carried out with 4.0 mm standard (partially threaded) locking screws.

Insert the Guide Bar (178130) into the handle, and adjust its position to the number corresponding to the selected nail length (see inset). Lock the arm firmly in place. Ensure the guide bar is located **laterally** over the humerus. Attach the Radiolucent Distal Adapter (178160) to the guide bar.

Mount the Targeting Arm (178170) on the distal adapter so it is positioned over the humerus **posteriorly**.

N.B. The surgeon should be aware of the position of the radial nerve during this procedure. For this reason the nail should be inserted as distally as possible to reduce risk of damage to the radial nerve.

178130
Guide Bar

178160
Radiolucent Distal Adapter

178170
Targeting Arm

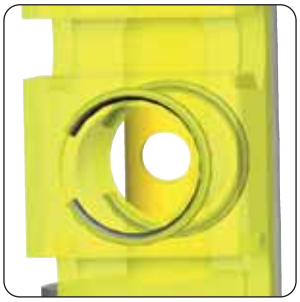

Not aligned

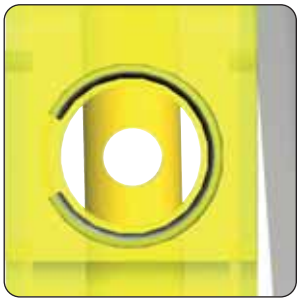

Aligned

The proximal hole in the Radiolucent Distal Adapter (178160) has two targeting rings to enable it to be centred over the nail. **After having carefully rotated the arm externally**, the Image Intensifier is positioned over the distal adapter so that the two rings appear as one ring. If the rings are not central over the nail hole the guide bar is moved anteriorly or posteriorly until they are centered.

Insert the Stabilizing Sleeve (173201) and trocar (11129) through the **proximal** hole in the distal adapter down to the skin. Position it over the centre of the bone, make an incision and advance it down to the bone. Insert the 6 mm Single-Use Cannulated Drill Bit Kit (99-178285, consisting of a 6 mm cannulated drill bit and a 2 mm Kirschner wire 220 mm long) into the stabilizing sleeve and push the two together down to the bone. Using the Hammer (173380) and the Impactor (173071),
tap the K-wire until it is flush with the end of the cannulated drill. Drill the first cortex only, paying attention not to push against the nail.

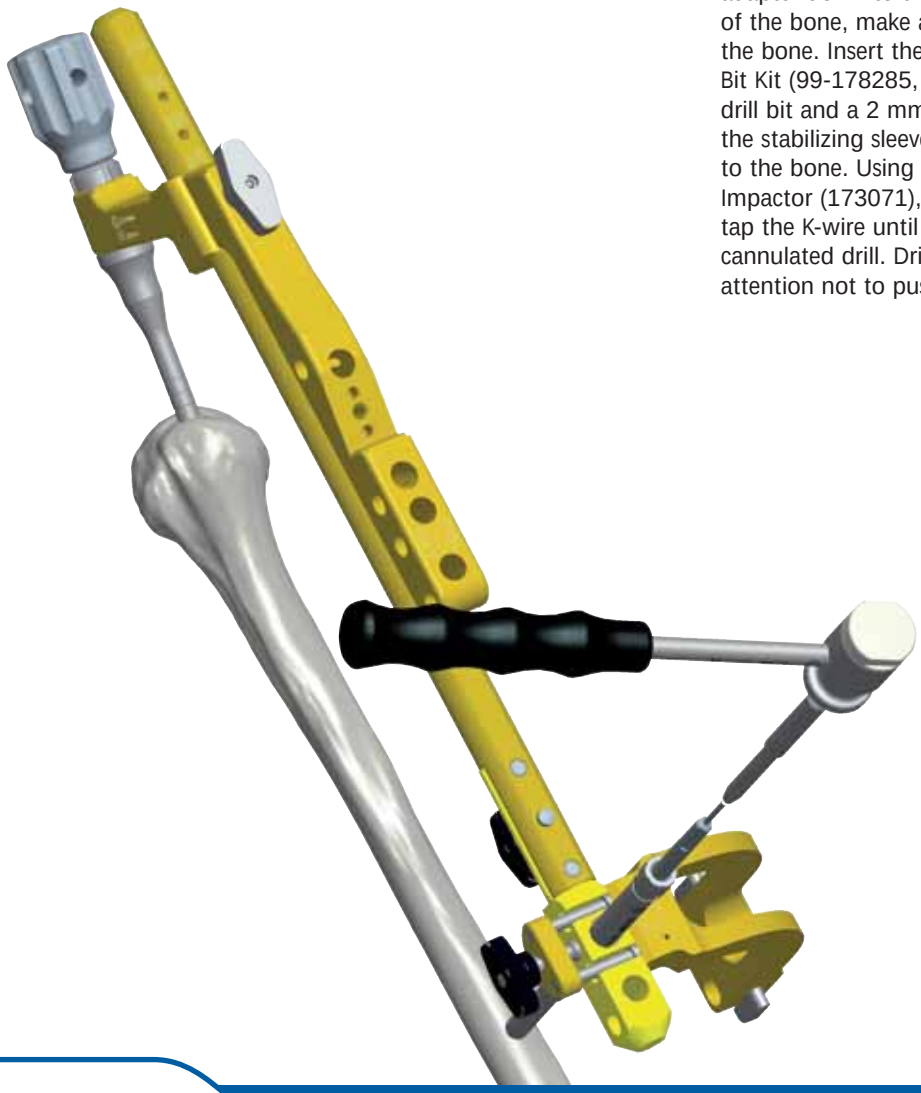

INSTRUMENTATION

173201
Stabilizing Sleeve

11129
Trocar

99-178285
6 mm
Cannulated
Drill Bit Kit

173380
Hammer

Remove the cannulated drill, K-wire and stabilizing sleeve. Attach the Quick Connect T-Handle (173350) to the Stabilizing Rod (178041) and insert it into the proximal hole in the distal adapter down to the corresponding threaded hole in the nail. Screw it in fully.

If there is difficulty in finding the threaded hole in the nail with the guide bar in place, the targeting arm and distal adapter can be removed together so that the stabilizing rod (178041) may be used to find the hole in the nail with a probing technique. Once this hole has been found, remove the quick connect T-handle and insert the targeting arm and distal adapter over the stabilizing rod.

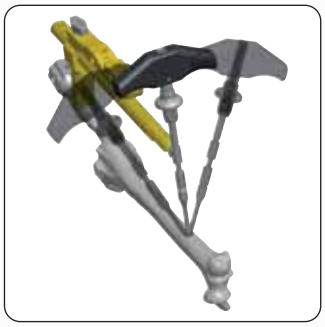

Screw the Locking Nut (173032) to the rod. Attach the correct Spacer (173051, 173052, 173058) for the diameter (7-9 mm) of the nail and tighten the nut fully.

NB. The spacer **must** be attached to the stabilizing rod with the number (7,8,or 9) facing **outwards**.

173051 / 2 / 8

178041
Stabilizing Rod

173032
Locking Nut

173051 / 2 / 8
Spacer

173350
T Handle

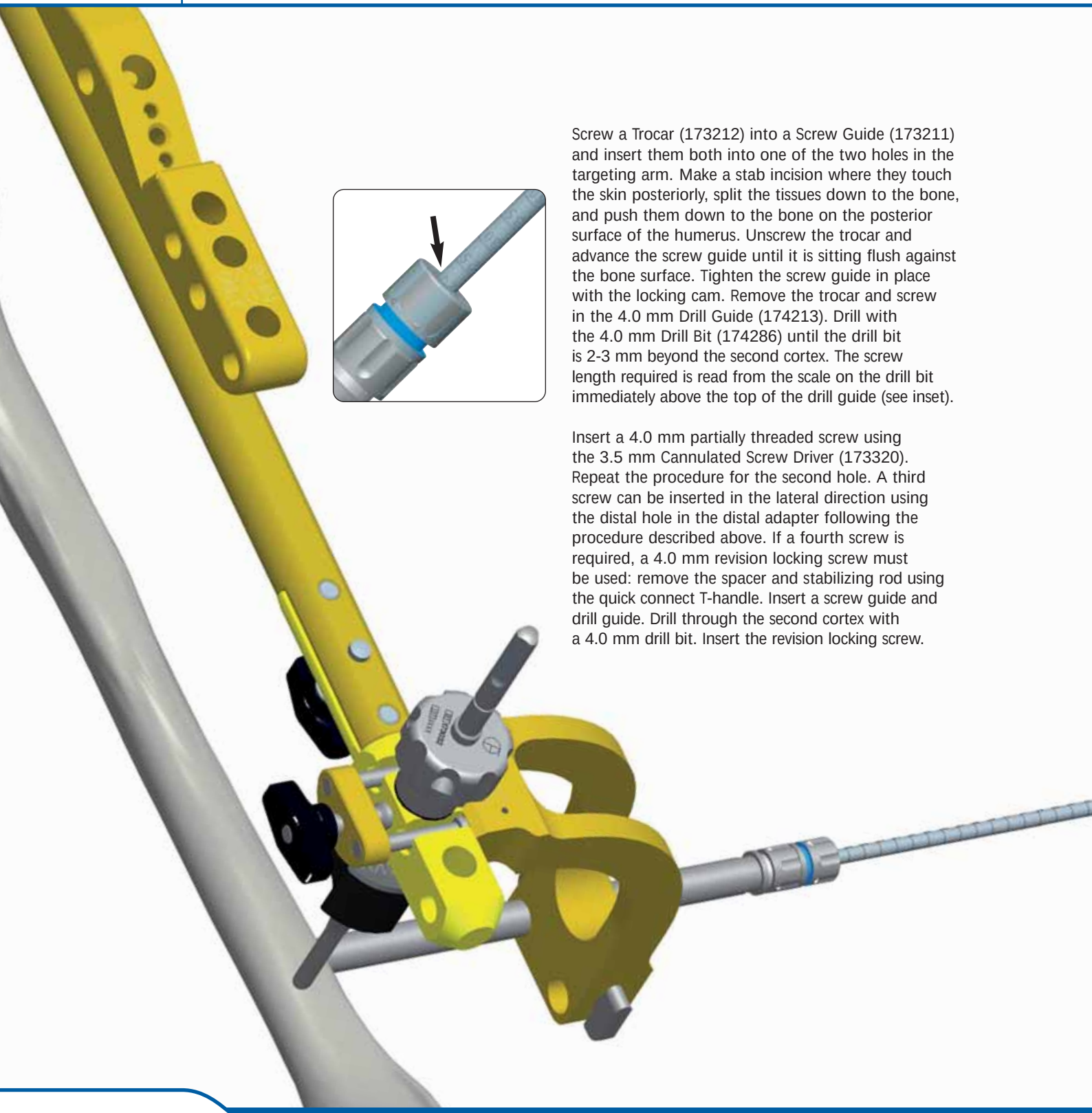

Screw a Trocar (173212) into a Screw Guide (173211) and insert them both into one of the two holes in the targeting arm. Make a stab incision where they touch the skin posteriorly, split the tissues down to the bone, and push them down to the bone on the posterior surface of the humerus. Unscrew the trocar and advance the screw guide until it is sitting flush against the bone surface. Tighten the screw guide in place with the locking cam. Remove the trocar and screw in the 4.0 mm Drill Guide (174213). Drill with the 4.0 mm Drill Bit (174286) until the drill bit is 2-3 mm beyond the second cortex. The screw length required is read from the scale on the drill bit immediately above the top of the drill guide (see inset).

Insert a 4.0 mm partially threaded screw using the 3.5 mm Cannulated Screw Driver (173320). Repeat the procedure for the second hole. A third screw can be inserted in the lateral direction using the distal hole in the distal adapter following the procedure described above. If a fourth screw is required, a 4.0 mm revision locking screw must be used: remove the spacer and stabilizing rod using the quick connect T-handle. Insert a screw guide and drill guide. Drill through the second cortex with a 4.0 mm drill bit. Insert the revision locking screw.

INSTRUMENTATION

173212
Trocar

173211
Screw Guide

174213
4.0 mm
Drill Guide

174286
4.0 mm
Drill Bit

173320
3.5 mm
Cannulated
Screw Driver

Check for Fracture Distraction
Check for any malrotation or distraction of the fracture site before carrying out proximal locking. If necessary the sliding hammer (173370) can be used to close a fracture gap.

Proximal Locking
See under Short Proximal Humeral Nail on page 12

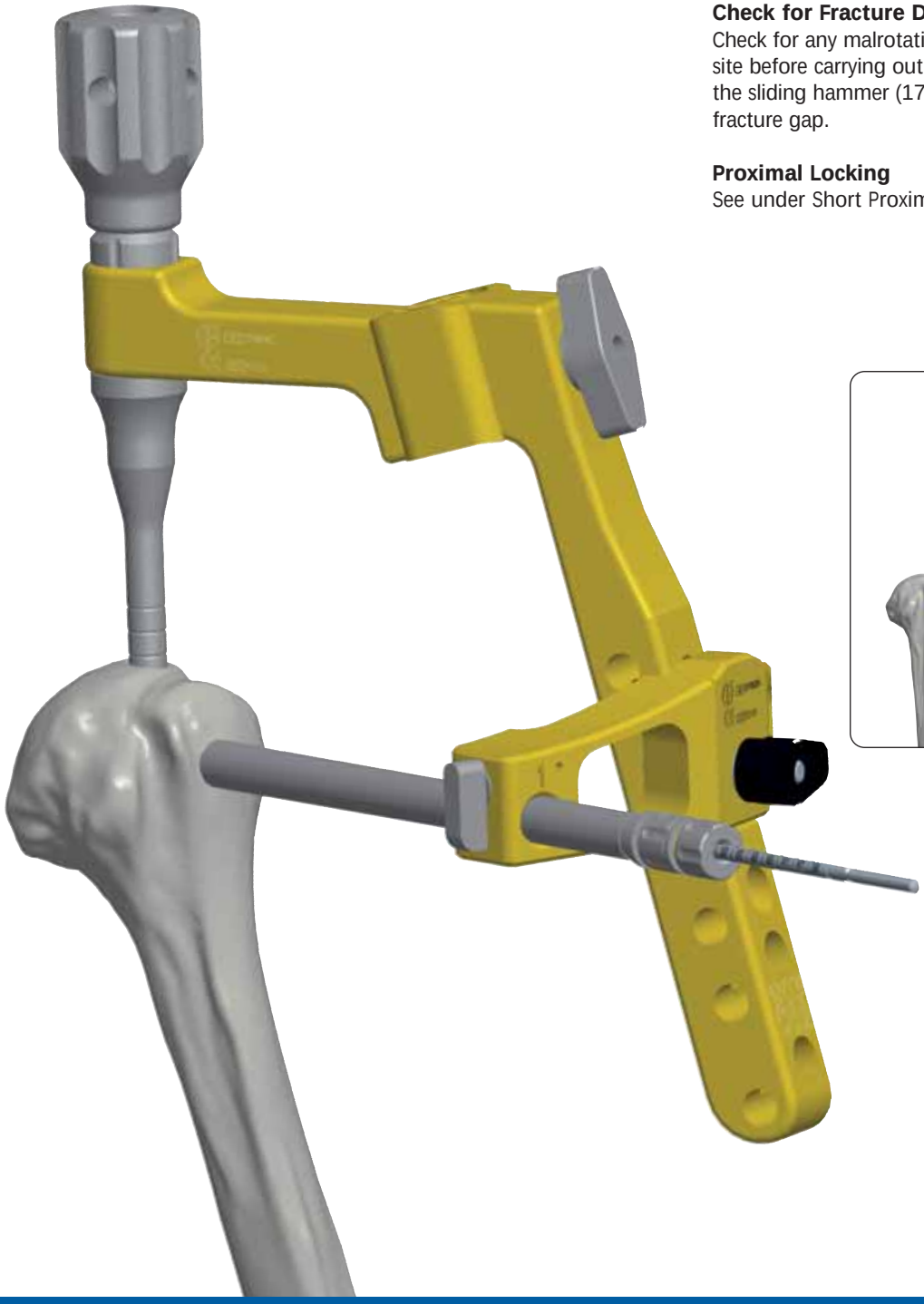

173370
Sliding Hammer

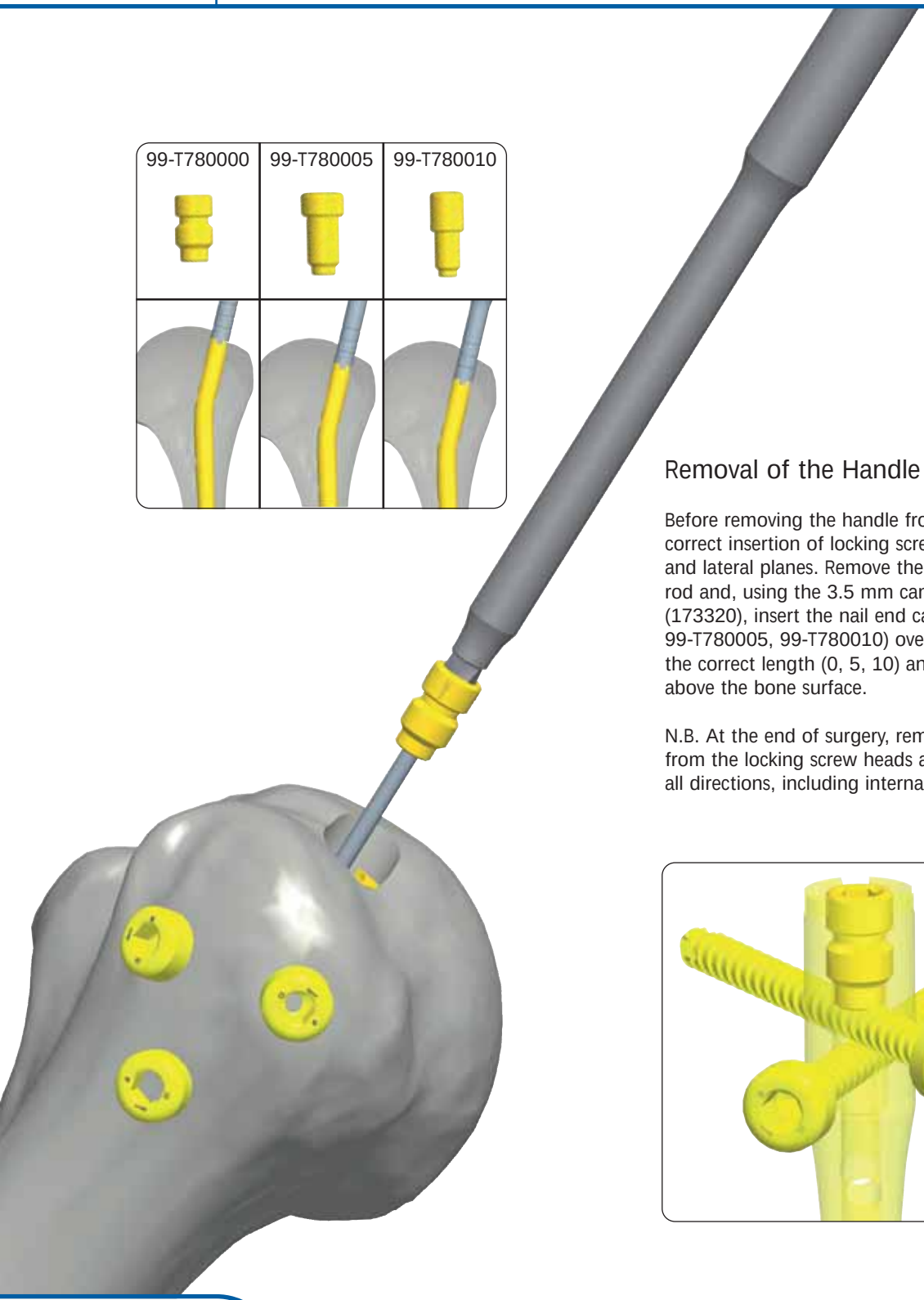

Removal of the Handle and Closure

Before removing the handle from the nail, check correct insertion of locking screws both in the AP and lateral planes. Remove the handle and the locking rod and, using the 3.5 mm cannulated screw driver (173320), insert the nail end cap (99-T780000, 99-T780005, 99-T780010) over a K-wire, choosing the correct length (0, 5, 10) and avoiding protrusion above the bone surface.

N.B. At the end of surgery, remove the deltoid fibres from the locking screw heads and mobilise the arm in all directions, including internal and external rotation.

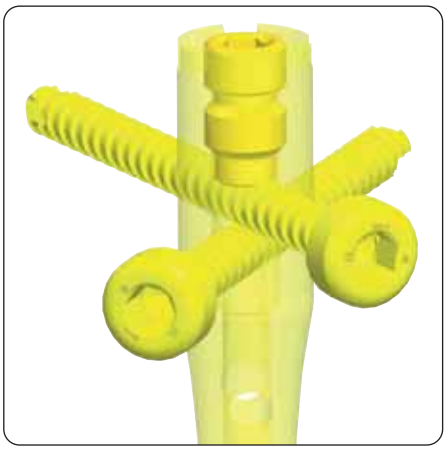

INSTRUMENTATION

11146
2 mm K-wire

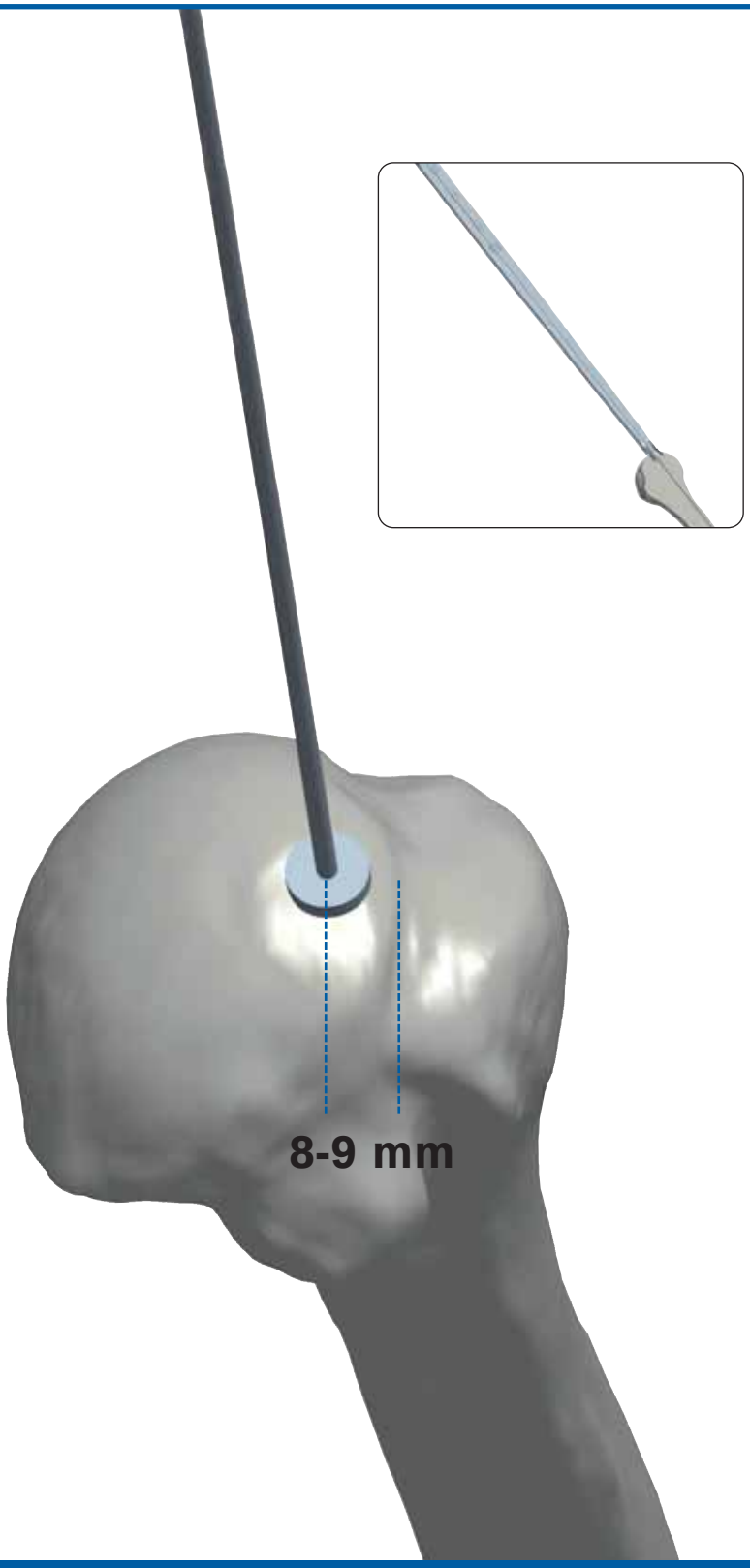

Diaphyseal Humeral Nail

Antegrade Insertion

By M. Manca, MD

Entry point
See under Short Proximal Humeral Nail on page 9.

Reaming
See under Long Proximal Humeral Nail on page 15.

Measurement of Nail Length
The ruler (178275) is mounted in the ruler support (173276), and positioned at the entry portal. The nail length is read from the position of the tip of the guide wire.

N.B. The ruler is calibrated for a 780 mm guide wire. The nail should be inserted as distally as possible.

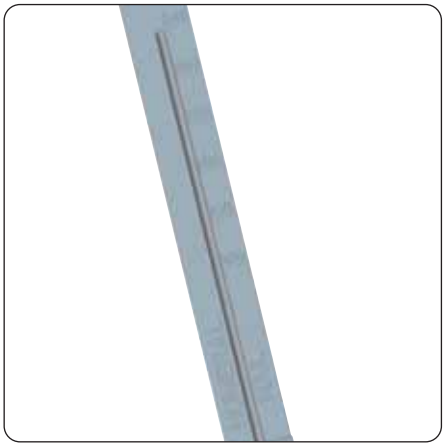

99-178282
Guide Wire
without olive
2.5x780 mm

178275
Humeral Ruler

173276
Ruler Support

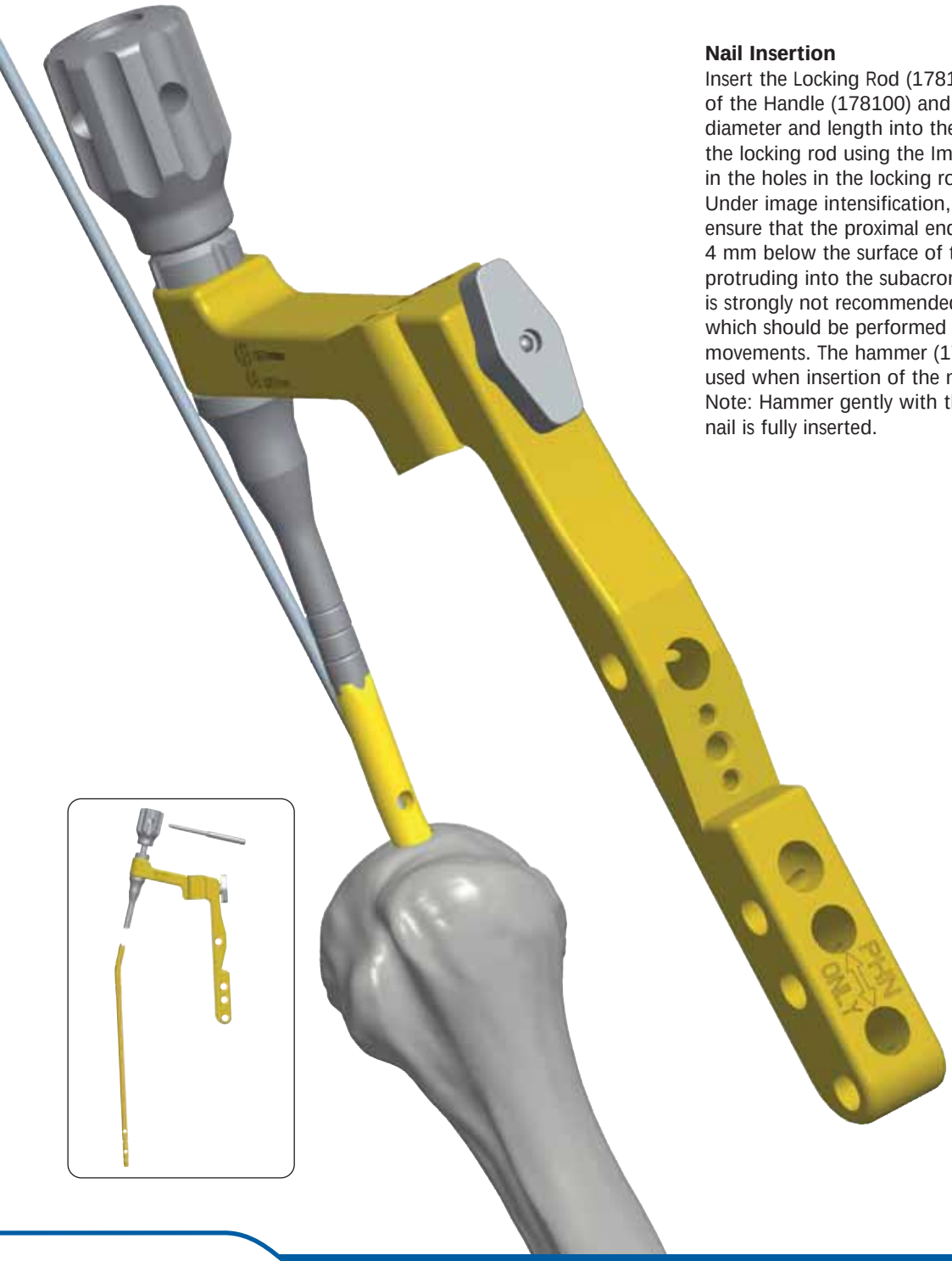

Nail Insertion
Insert the Locking Rod (178110) into the back of the Handle (178100) and the nail of correct diameter and length into the nail support. Tighten the locking rod using the Impactor (173071) inserted in the holes in the locking rod.
Under image intensification, insert the nail. Always ensure that the proximal end of the nail is about 4 mm below the surface of the humeral head without protruding into the subacromial zone. Hammering is strongly not recommended during nail insertion which should be performed by pushing and rotatory movements. The hammer (173380) should only be used when insertion of the nail is almost completed.
Note: Hammer gently with the plastic surface until the nail is fully inserted.

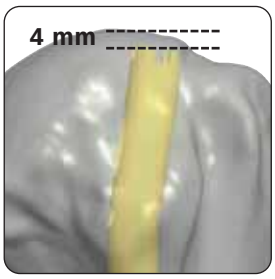

INSTRUMENTATION

178110
Locking Rod

178100
Handle

173071
Impactor

173380
Hammer

Distal Locking

See under Long Proximal Humeral Nail on page 17.

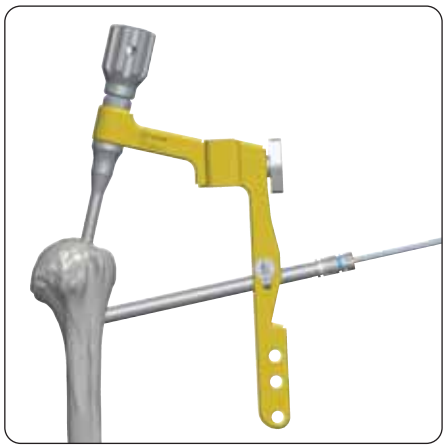

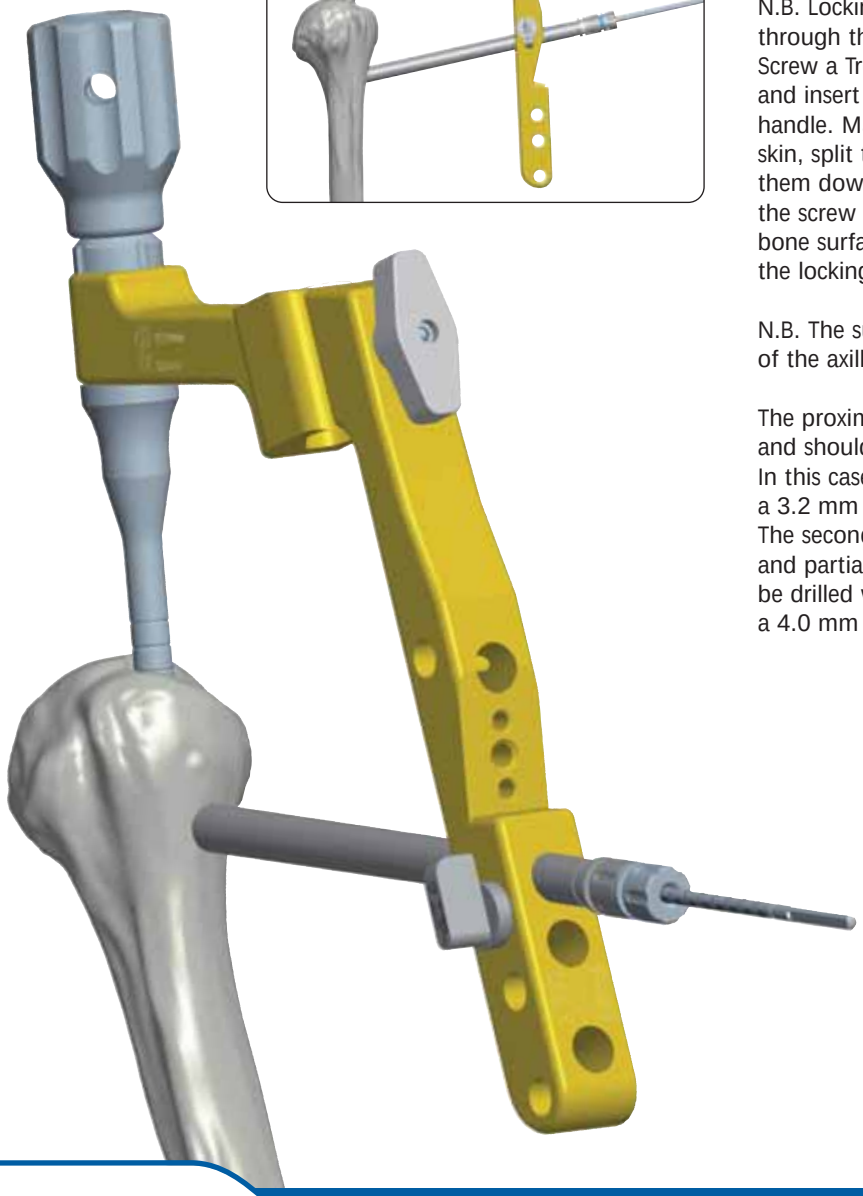

Check for Fracture Distraction
Check for any malrotation or distraction of the fracture site before carrying out proximal locking. If necessary the sliding hammer (173370) can be used to close a fracture gap.

Proximal Locking
One or two locking screws are used proximally.
N.B. Locking screws should not be inserted through the two holes labelled “PHN ONLY”.
Screw a Trocar (173212) into a Screw Guide (173211) and insert them both into the proximal hole in the handle. Make a stab incision where they touch the skin, split the tissues with blunt dissection, and push them down to the bone. Unscrew the trocar and push the screw guide until it is sitting flush against the bone surface. Tighten the screw guide in place with the locking cam.

N.B. The surgeon should be aware of the position of the axillary nerve during proximal locking.

The proximal screw is inserted in the humeral head and should therefore be unicortical and fully threaded. In this case it is necessary to drill the bone with a 3.2 mm drill bit in a 3.2 mm drill guide.
The second, more distal, proximal screw is bicortical and partially threaded. In this case the pilot hole must be drilled with the 4.0 mm Drill Bit (174286) through a 4.0 mm drill guide (174213).

INSTRUMENTATION

173370
Sliding Hammer

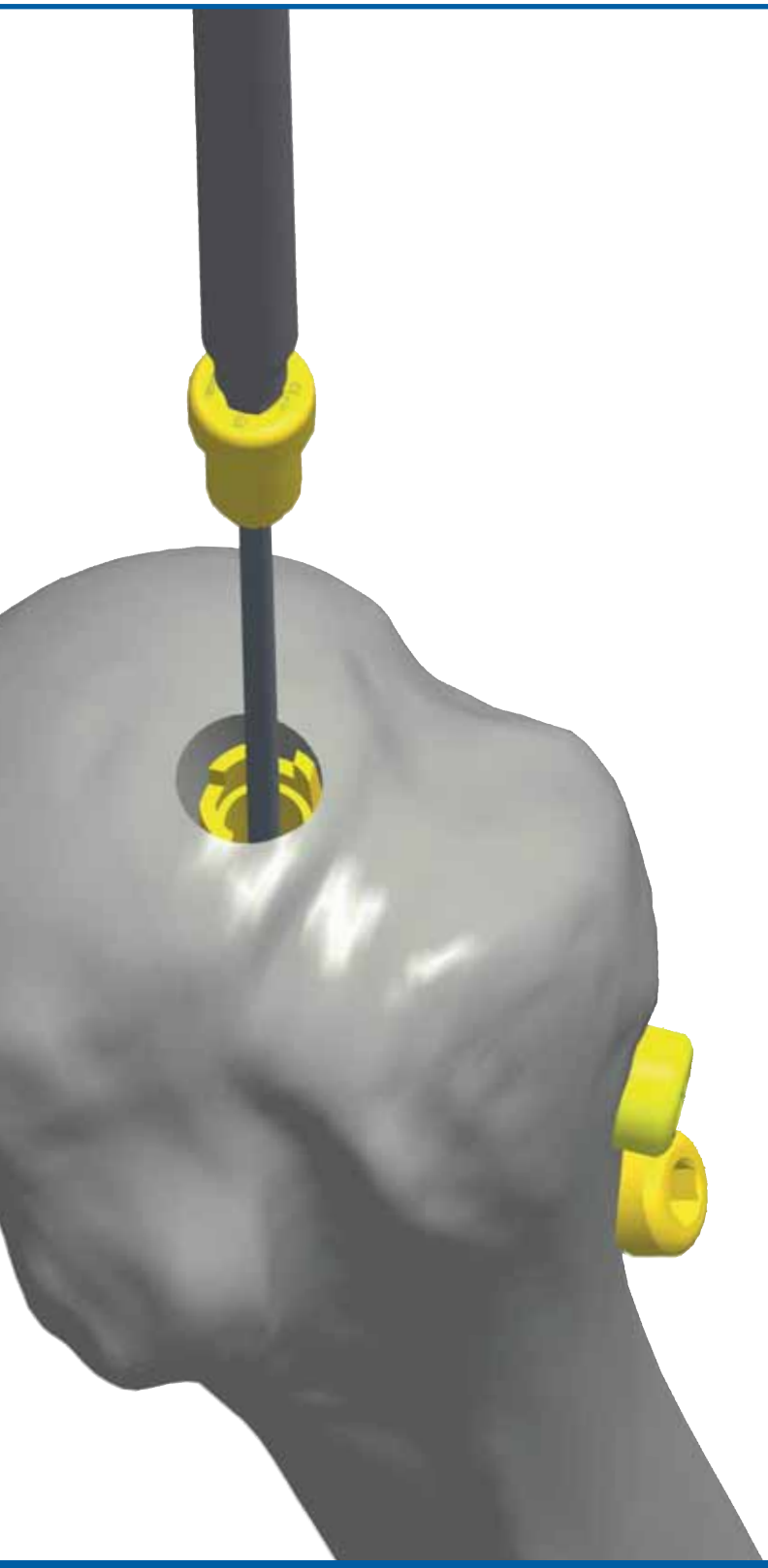

Removal of the Handle and Closure
Before removing the handle from the nail, check correct insertion of locking screws both in the AP and lateral planes. Remove the handle and the locking rod and, using the 3.5 mm cannulated screw driver (173320), insert the nail end cap (99-T780000, 99-T780005, 99-T780010) over a K-wire, choosing the correct length (0, 5, 10) and avoiding protrusion above the bone surface.

N.B. At the end of surgery, remove the deltoid fibres from the locking screw heads and mobilise the arm in all directions, including internal and external rotation.

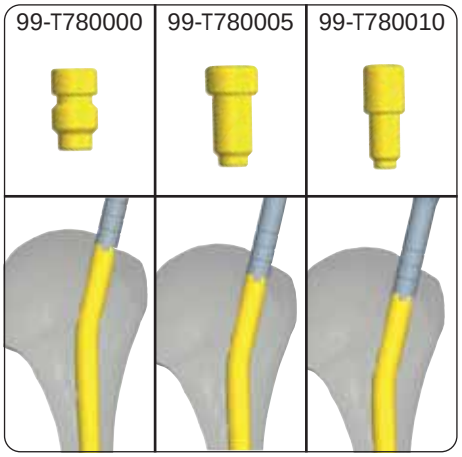

11146
K-Wire without olive
d. 2x150 mm

Retrograde Insertion

By R. Giancola, MD

Entry Point

Using a triceps-splitting incision, expose the dorsal side of the humerus 8-10 cm proximal from the tip of the olecranon. Retract the triceps.

Place the Retrograde Insertion Template (178215) on the bone surface with the most distal hole positioned at the proximal edge of the olecranon fossa, in line with the medullary canal. Secure the template in place using up to three K-wires (11146).

Using a 4.8 mm Drill Bit (1100101), make four holes through the template. Ensure the second cortex is not penetrated. Remove the template.

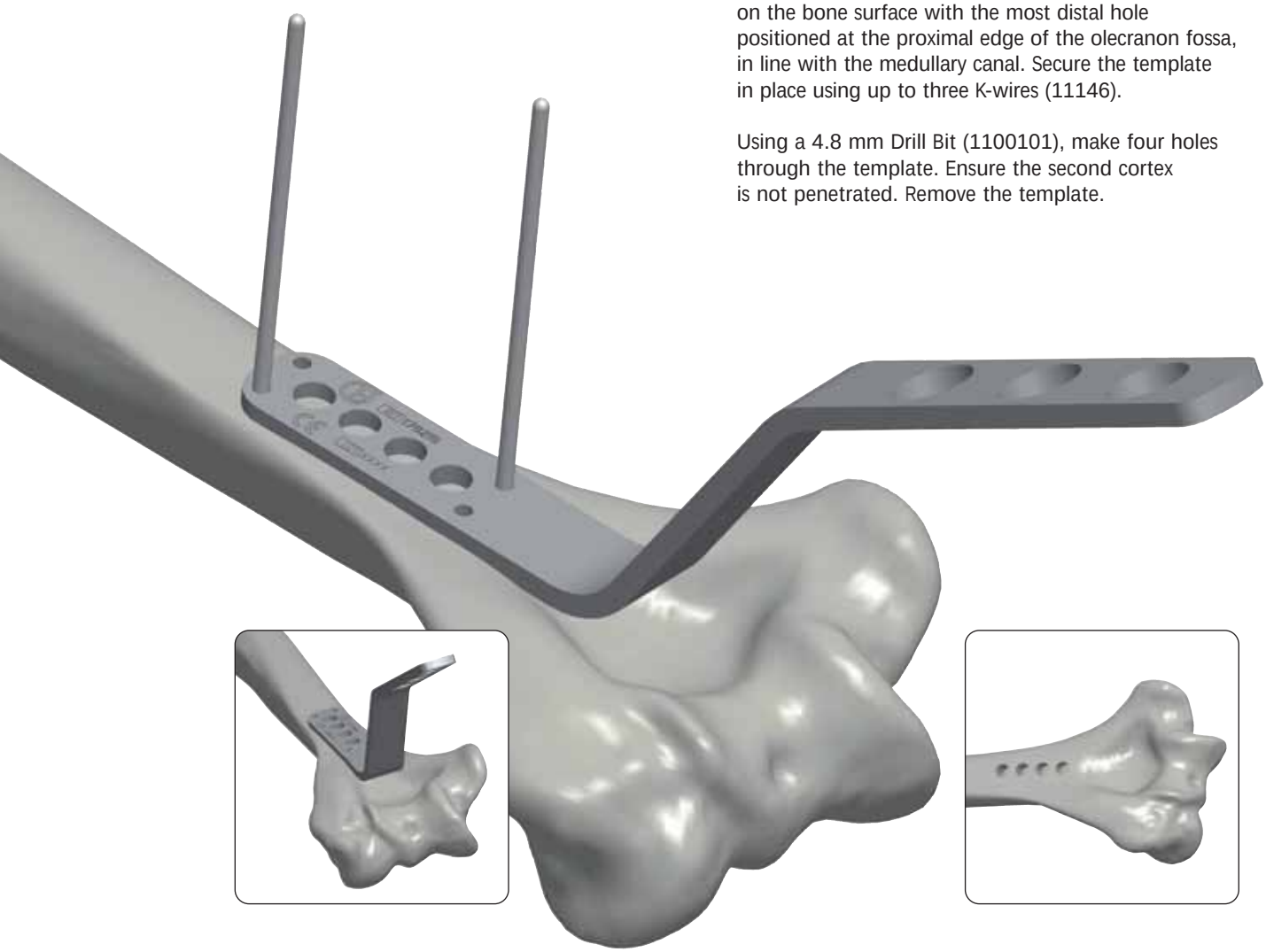

INSTRUMENTATION

178215
Retrograde Insertion Template

11146
2 mm K-wire

1100101
Drill Bit 4.8 mm

Join the four holes using the Retrograde Insertion Drill (178284), starting at the distal hole. Start drilling perpendicular to the bone and then incline the drill until it is in line with the medullary canal. Continue until a trough has been formed that opens into the medullary canal.

It is necessary to ream the distal part of the humerus before nail insertion. The distal part of the humerus should be reamed 1 mm more than the nail diameter. The 7 mm nail is used in most cases. Reaming is always advisable in order to insert the nail easily without force. A guide wire with olive should be inserted and also used for initial fracture reduction. After reaming, the olive-tipped guide wire should be exchanged for a plain guide wire before nail insertion.

Guide wire exchange is facilitated using the Guide Wire Exchange Tube (178353).

INSTRUMENTATION

178284
Retrograde Insertion Drill

178353
Guide Wire Exchange Tube

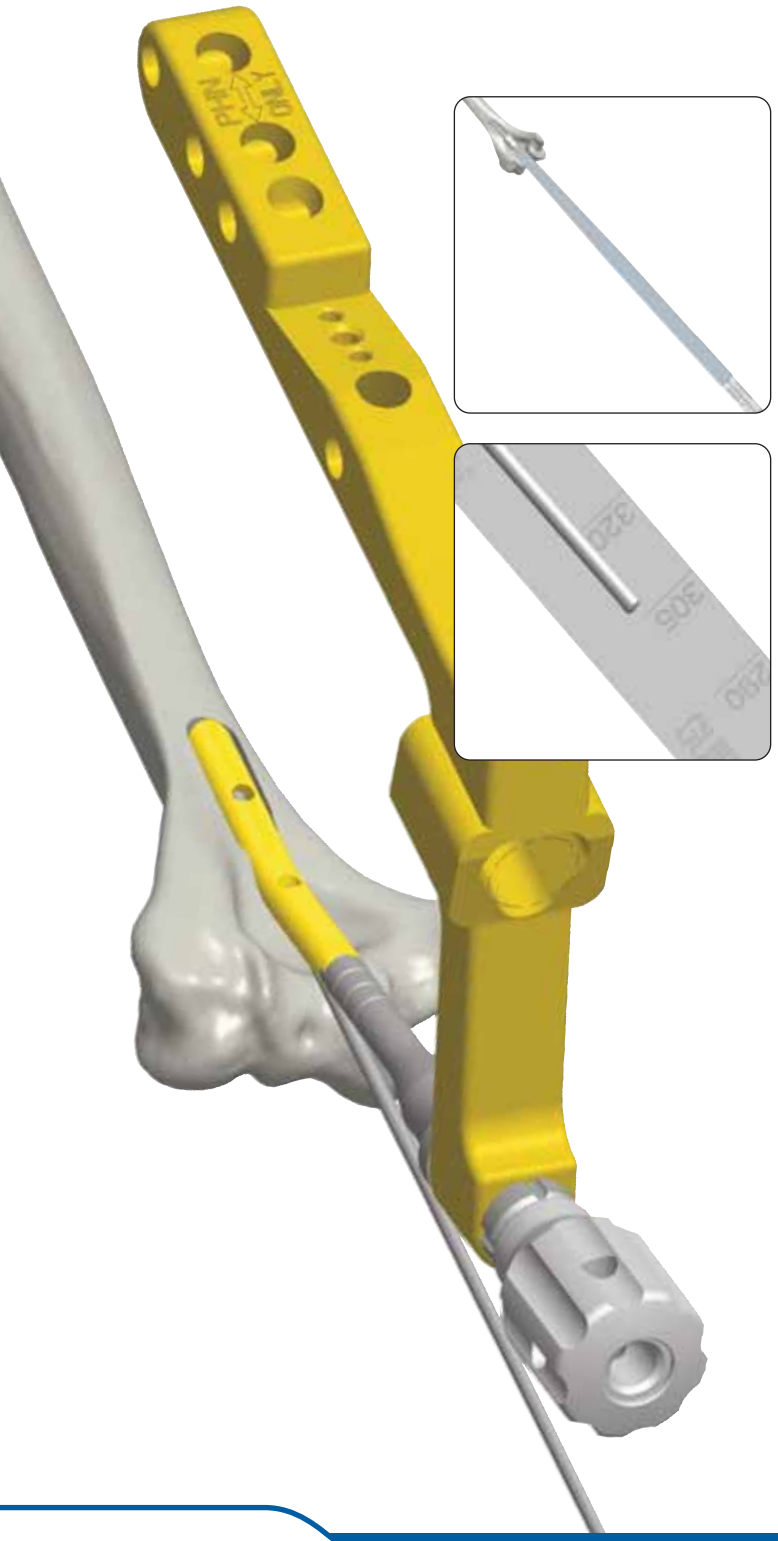

Measurement of Nail Length
The ruler (178275) is mounted in the ruler support (173276), and positioned at the entry portal. The nail length is read from the position of the tip of the guide wire.

N.B. The ruler is calibrated for a 780 mm guide wire.

Nail Insertion
Insert the Locking Rod (178110) into the back of the Handle (178100) and the nail of correct diameter and length into the nail support. Tighten the locking rod using the Impactor (173071) inserted in the holes in the locking rod.

Insert the nail gently over the guide wire, using **rotatory movements if necessary.** If insertion is difficult, do not hammer but ream again the medullary canal. Alternatively, use a smaller diameter nail.

Under image intensification, insert the nail until it is beneath the insertion site and not protruding.

IF USED, THE GUIDE WIRE MUST NOW BE REMOVED.

INSTRUMENTATION

178275
Humeral Ruler

173276
Ruler Support

178110
Locking Rod

178100
Handle

173071
Impactor

Proximal locking
Proximal locking is carried out with 4.0 mm standard (partially threaded) locking screws.

Insert the Guide Bar (178130) into the handle, and adjust its position to the number corresponding to the selected nail length (see inset). Lock the arm firmly in place. Ensure the guide bar is located **posteriorly** over the humerus. Attach the Radiolucent Distal Adapter (178160) to the guide bar.

Mount the Targeting Arm (178170) on the distal adapter so it is positioned over the humerus **laterally**.

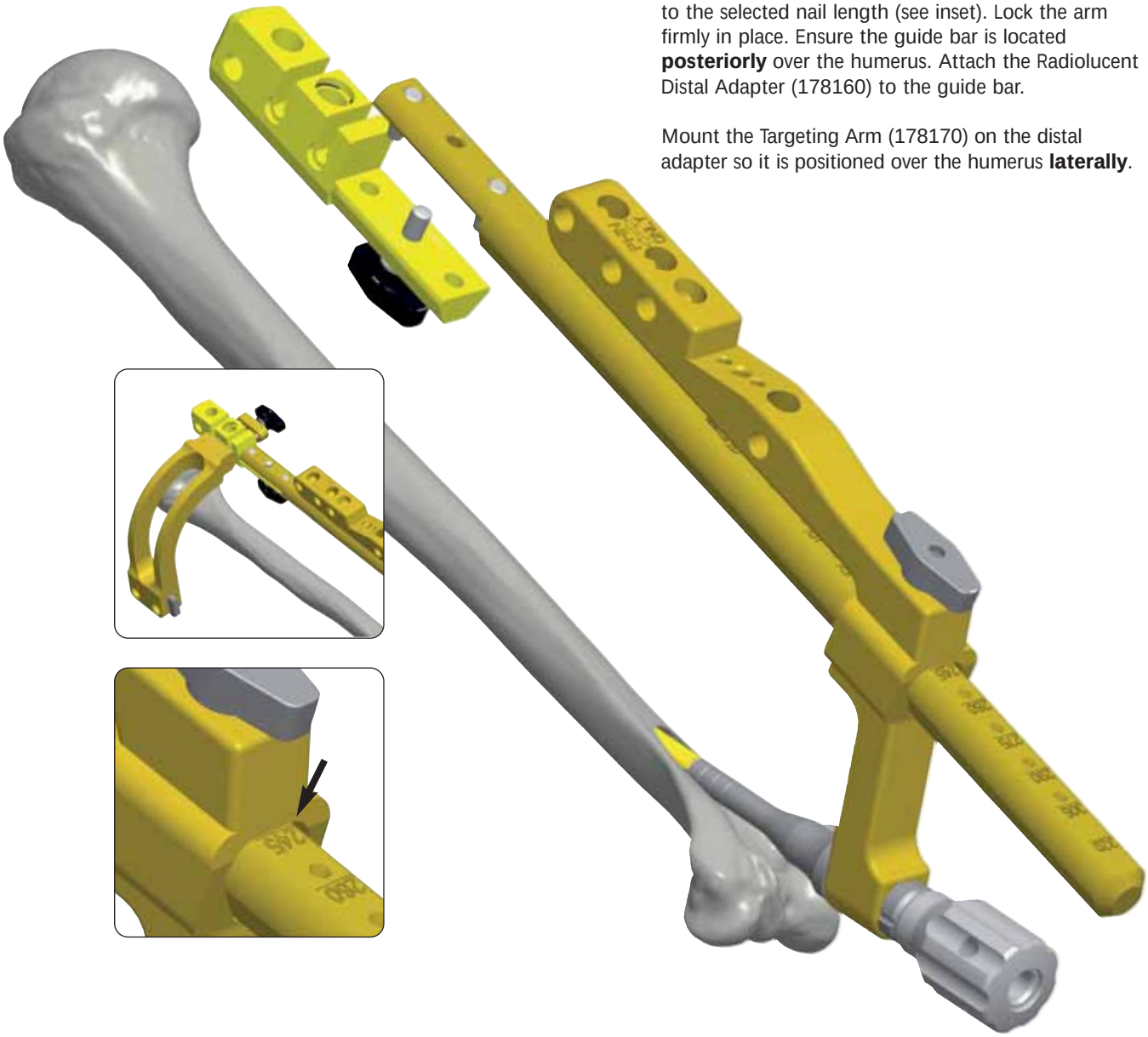

178130
Guide Bar

178160
Radiolucent Distal Adapter

178170
Targeting Arm

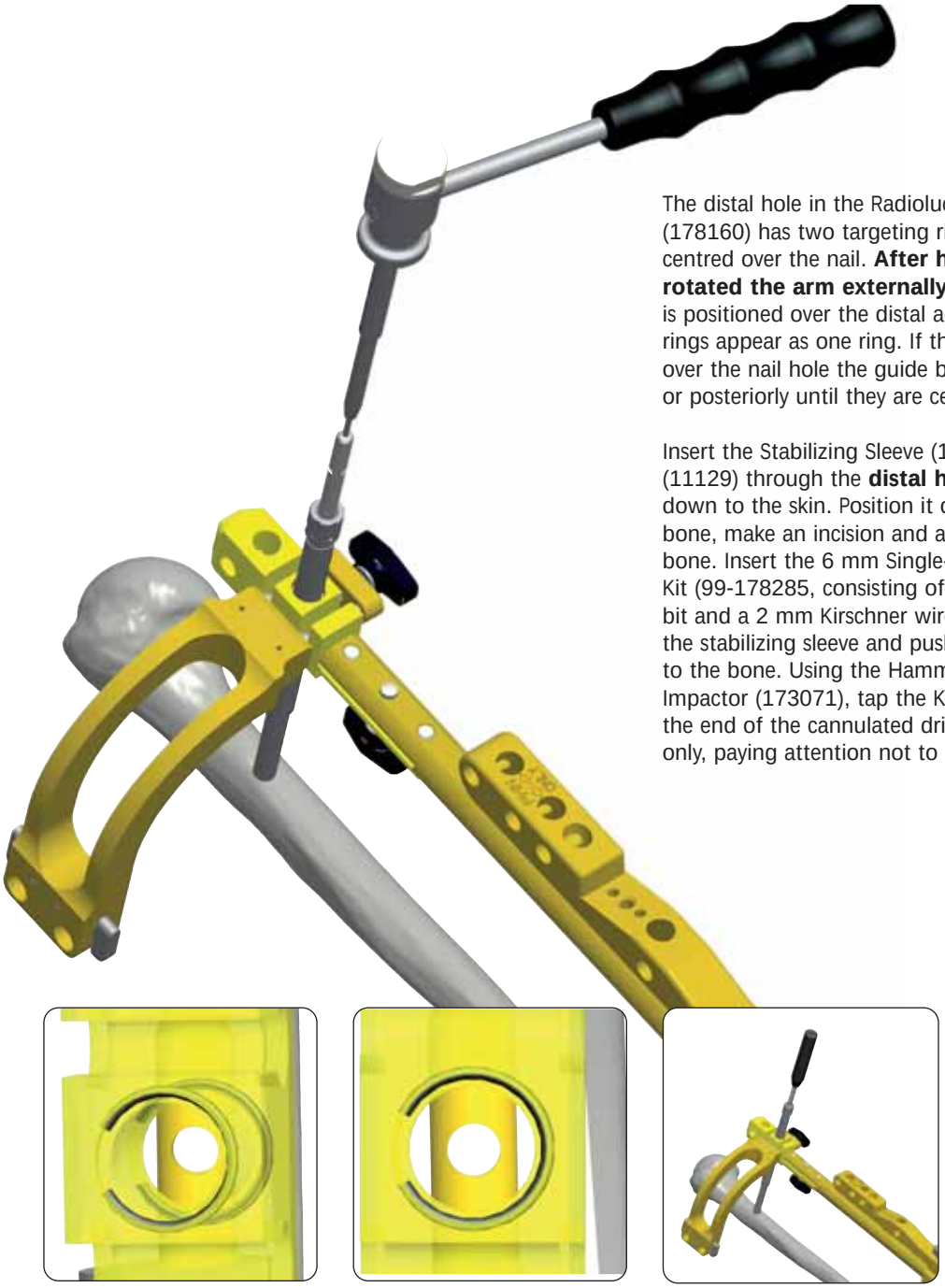

The distal hole in the Radiolucent Distal Adapter (178160) has two targeting rings to enable it to be centred over the nail. **After having carefully rotated the arm externally**, the Image Intensifier is positioned over the distal adapter so that the two rings appear as one ring. If the rings are not central over the nail hole the guide bar is moved anteriorly or posteriorly until they are centered.

Insert the Stabilizing Sleeve (173201) and trocar (11129) through the **distal hole** in the distal adapter down to the skin. Position it over the centre of the bone, make an incision and advance it down to the bone. Insert the 6 mm Single-Use Cannulated Drill Bit Kit (99-178285, consisting of a 6 mm cannulated drill bit and a 2 mm Kirschner wire 220 mm long) into the stabilizing sleeve and push the two together down to the bone. Using the Hammer (173380) and the Impactor (173071), tap the K-wire until it is flush with the end of the cannulated drill. Drill the first cortex only, paying attention not to push against the nail.

Not aligned

Aligned

INSTRUMENTATION

173201
Stabilizing Sleeve

11129
Trocar

99-178285
6 mm Single-Use Cannulated Drill Bit Kit

173380
Hammer

Remove the cannulated drill, K-wire and stabilizing sleeve. Attach the Quick Connect T-Handle (173350) to the Stabilizing Rod (178041) and insert it into the proximal hole in the distal adapter down to the corresponding threaded hole in the nail. Screw it in fully.

If there is difficulty in finding the threaded hole in the nail with the guide bar in place, the targeting arm and distal adapter can be removed together so that the stabilizing rod (178041) may be used to find the hole in the nail with a probing technique. Once this hole has been found, remove the quick connect T-handle and insert the targeting arm and distal adapter over the stabilizing rod.

Screw the Locking Nut (173032) to the rod. Attach the correct Spacer (173051, 173052, 173058) for the diameter (7-9 mm) of the nail and tighten the nut fully.

NB. The spacer **must** be attached to the stabilizing rod with the number (7, 8, or 9) facing **outwards**.

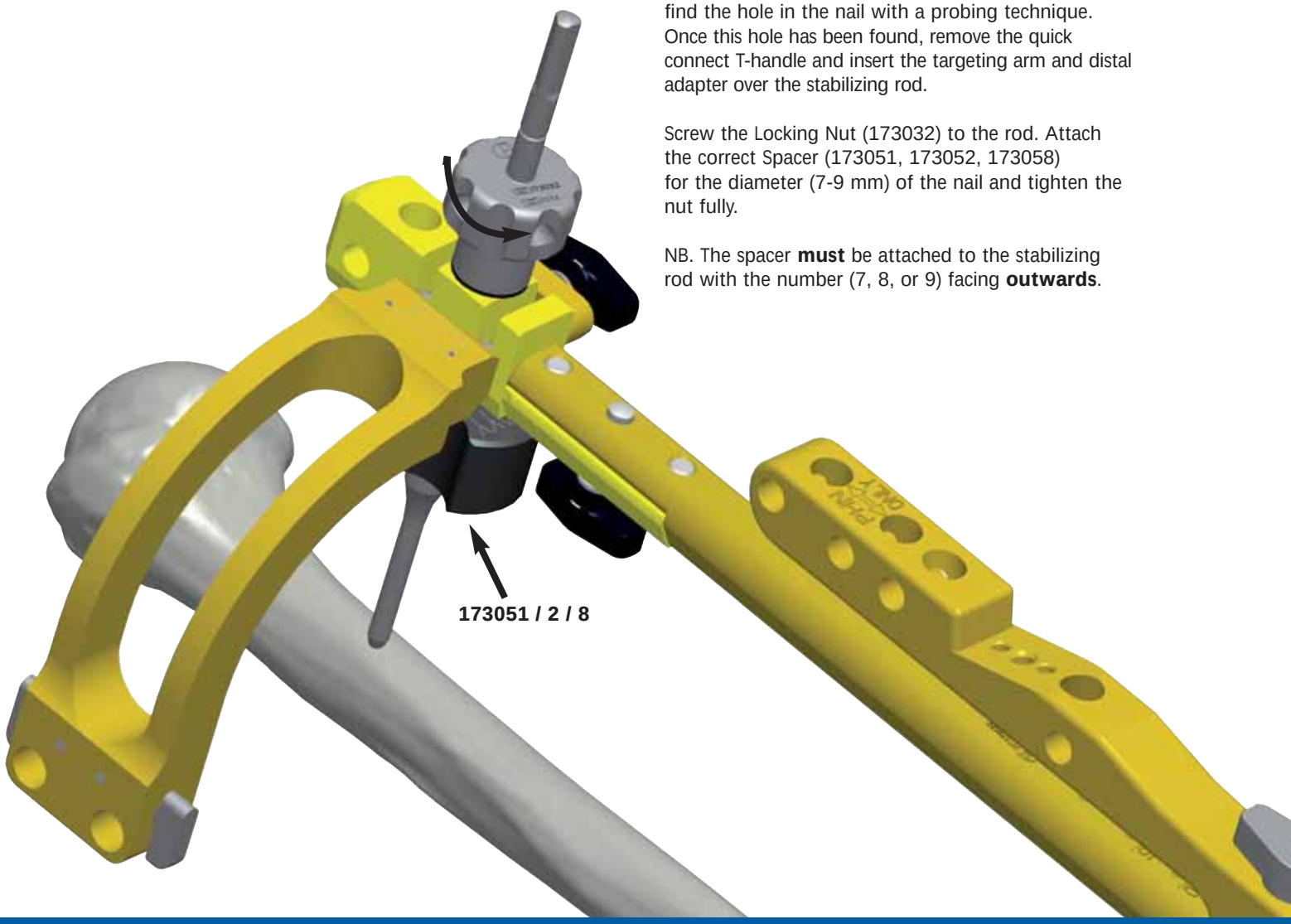

173350
Quick Connect T-Handle

178041
Stabilizing Rod

173032
Locking Nut

173051 / 2 / 8
Spacer

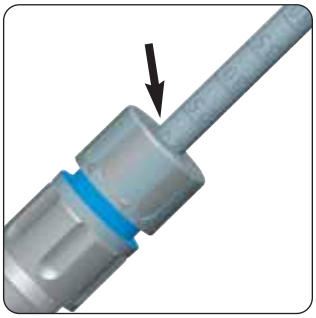

Screw a Trocar (173212) into a Screw Guide (173211) and insert them both into one of the two holes in the targeting arm. Make a stab incision where they touch the skin posteriorly, split the tissues down to the bone, and push them down to the bone on the posterior surface of the humerus. Unscrew the trocar and advance the screw guide until it is sitting flush against the bone surface. Tighten the screw guide in place with the locking cam.

Remove the trocar and screw in the 4.0 mm Drill Guide (174213). Drill with the 4.0 mm Drill Bit (174286) until the drill bit is 2-3 mm beyond the second cortex. The screw length required is read from the scale on the drill bit immediately above the top of the drill guide (see inset). Insert a 4.0 mm partially threaded screw using the 3.5 mm Cannulated Screw Driver (173320). Repeat the procedure for the second hole. A third screw can be inserted in the lateral direction using the proximal hole in the distal adapter following the procedure described above. If a fourth screw is required, a 4.0 mm revision locking screw must be used: remove the spacer and stabilizing rod using the quick connect T-handle. Insert a screw guide and drill guide. Drill through the second cortex with a 4.0 mm drill bit. Insert the revision locking screw.

N.B. The surgeon should be aware of the position of the axillary nerve during proximal locking.

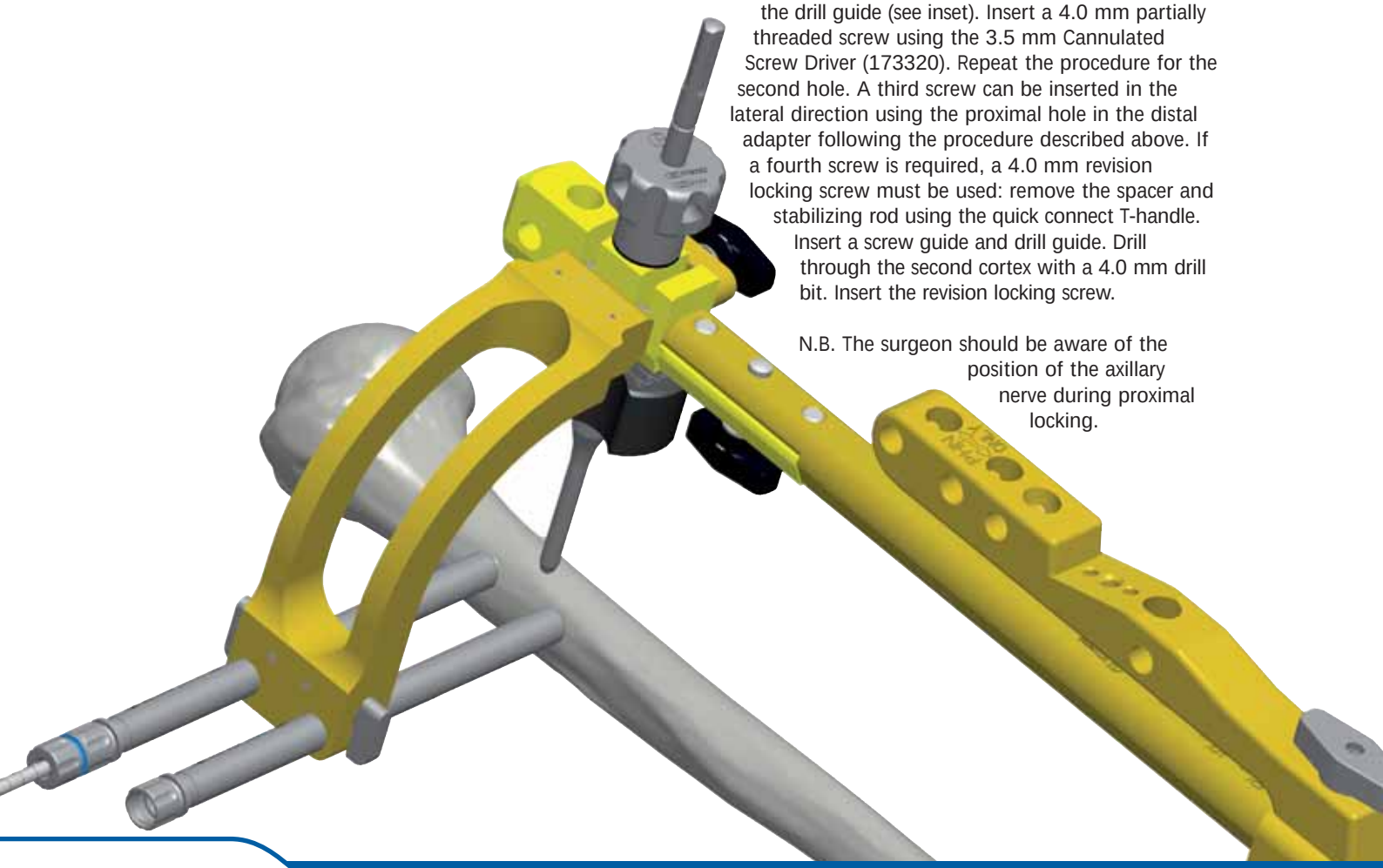

INSTRUMENTATION

173212
Trocar

173211
Screw Guide

174213
4.0 mm
Drill Guide

174286
4.0 mm
Drill Bit

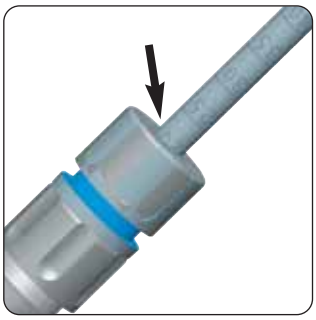

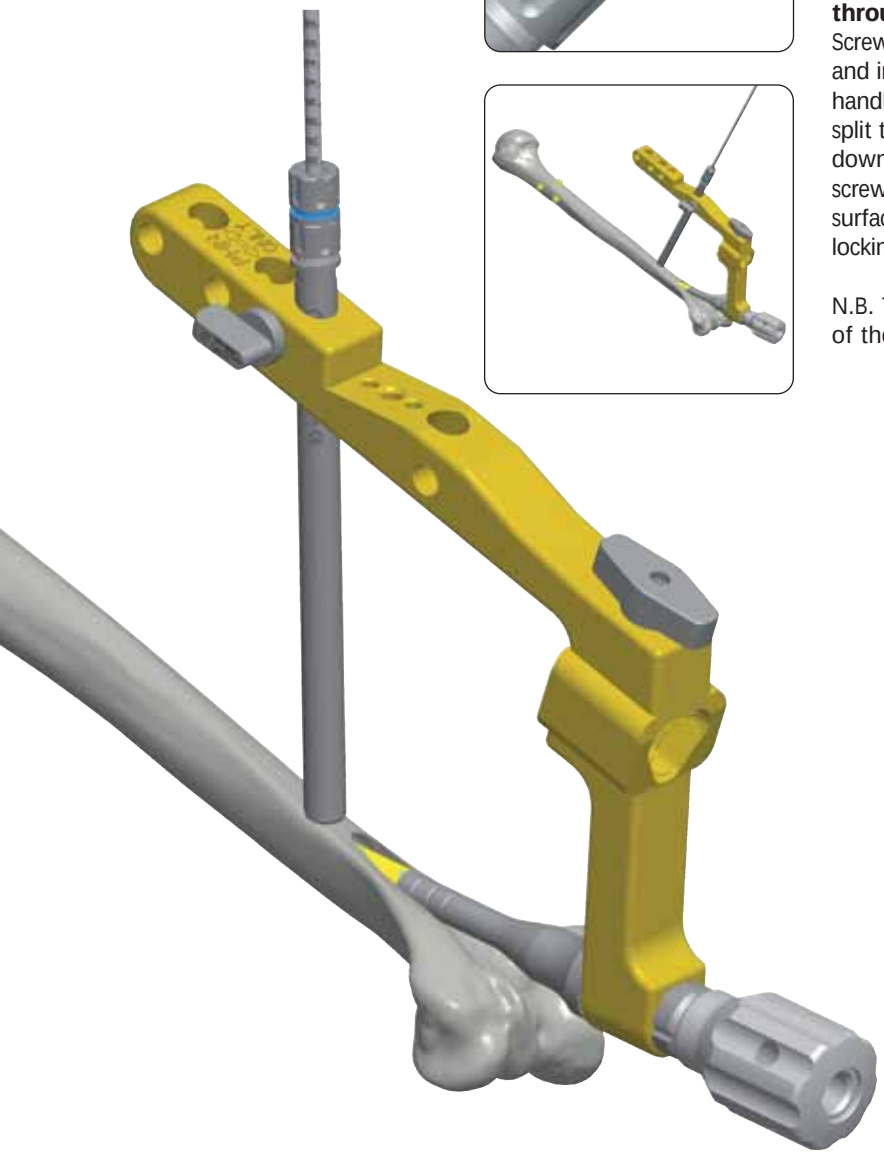

Check for Fracture Distraction
Check for any malrotation or distraction of the fracture site before carrying out distal locking. If necessary the sliding hammer (173370) can be used to close a fracture gap.

Distal Locking
One or two locking screws are used distally.
N.B. Locking screws should not be inserted through the two holes labelled "PHN ONLY".
Screw a Trocar (173212) into a Screw Guide (173211) and insert them both into the proximal hole in the handle. Make a stab incision where they touch the skin, split the tissues with blunt dissection, and push them down to the bone. Unscrew the trocar and push the screw guide until it is sitting flush against the bone surface. Tighten the screw guide in place with the locking cam.

N.B. The surgeon should be aware of the position of the radial nerve during proximal locking.

173370
Sliding Hammer

173320
3.5 mm Cannulated Screw Driver

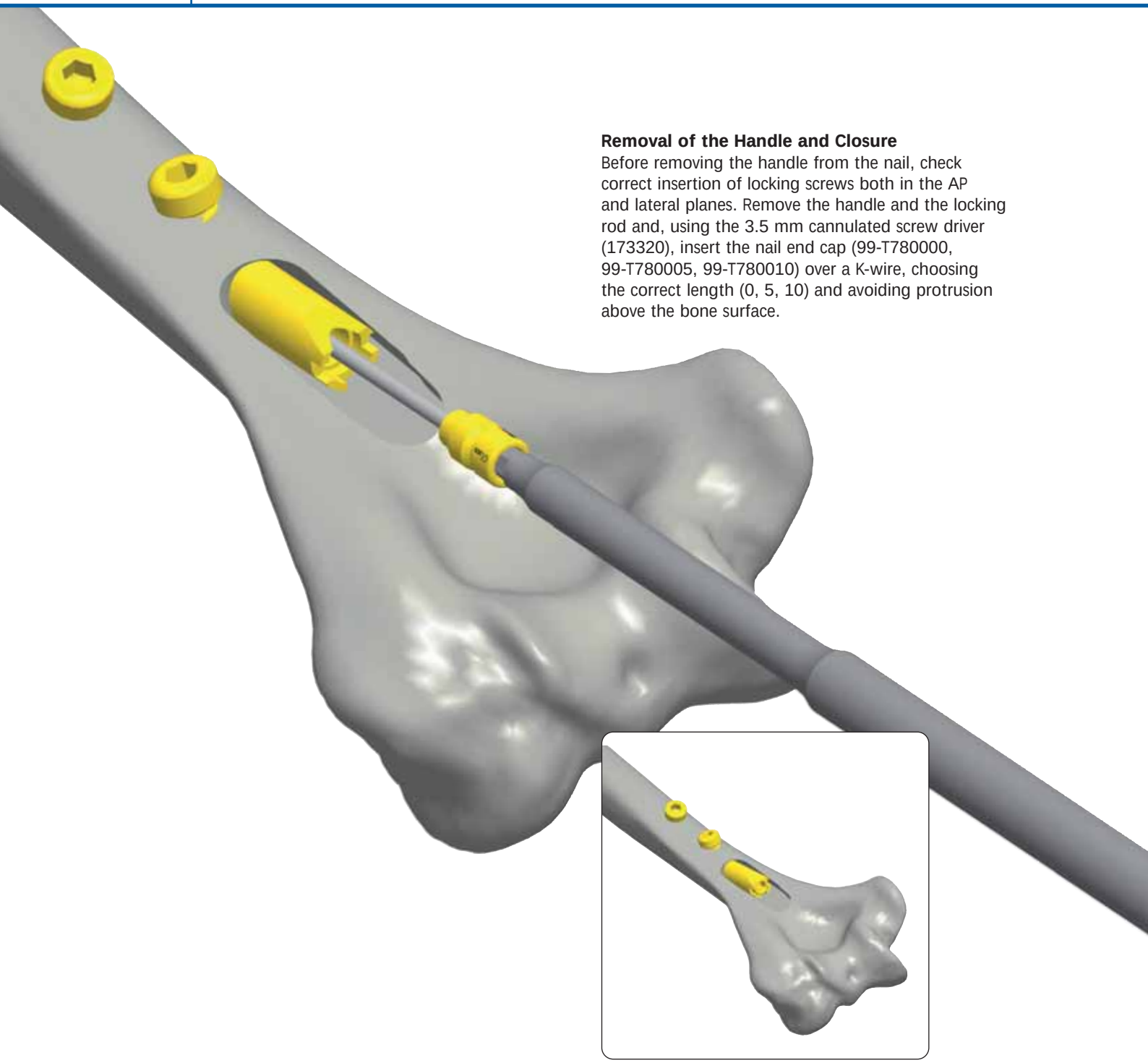

Removal of the Handle and Closure
Before removing the handle from the nail, check correct insertion of locking screws both in the AP and lateral planes. Remove the handle and the locking rod and, using the 3.5 mm cannulated screw driver (173320), insert the nail end cap (99-T780000, 99-T780005, 99-T780010) over a K-wire, choosing the correct length (0, 5, 10) and avoiding protrusion above the bone surface.

INSTRUMENTATION

11146
2 mm K-wire

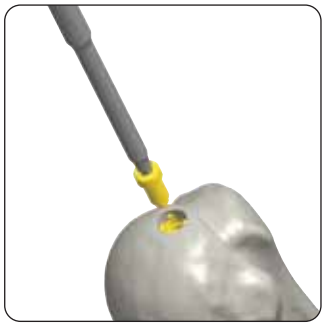

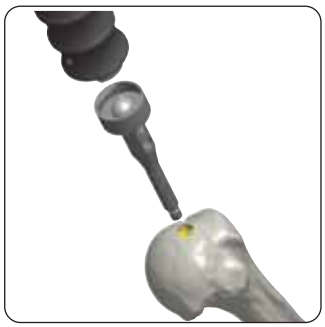

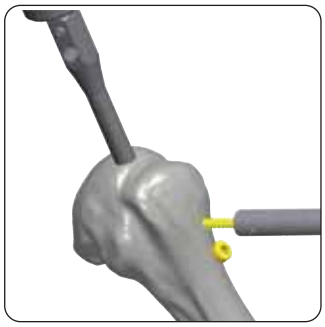

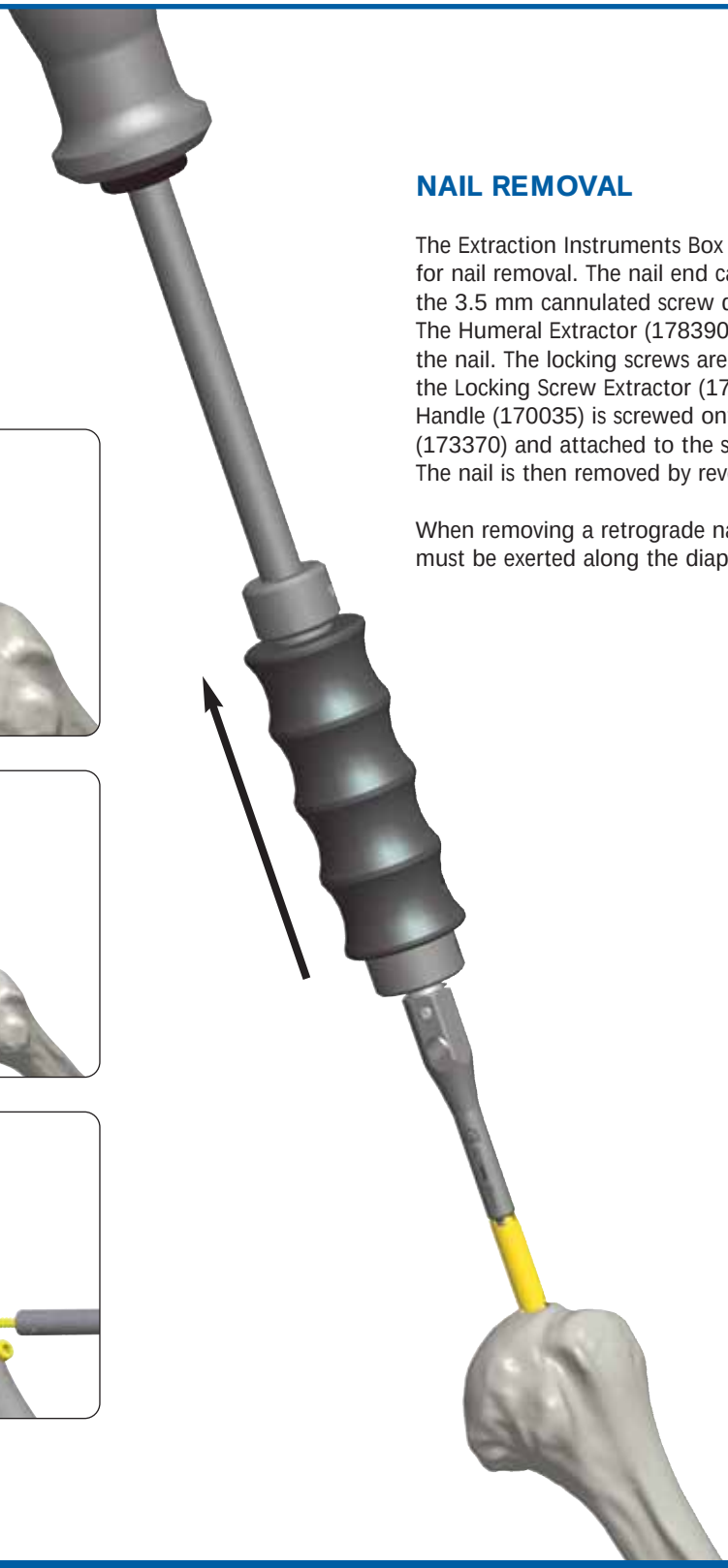

NAIL REMOVAL

The Extraction Instruments Box (173996-1) is needed for nail removal. The nail end cap is removed with the 3.5 mm cannulated screw driver (173320).
The Humeral Extractor (178390) is screwed fully into the nail. The locking screws are now all removed using the Locking Screw Extractor (17652). The Extractor Handle (170035) is screwed onto the Sliding Hammer (173370) and attached to the screw adapter.
The nail is then removed by reverse hammering.

When removing a retrograde nail, the pulling force must be exerted along the diaphyseal axis.

173320
3.5 mm
Cannulated
Screw Driver

178390
Humeral
Extractor

17652
Locking
Screw Extractor

170035
Extractor Handle

173370
Sliding Hammer

Manufactured by: ORTHOFIX Srl
Via Delle Nazioni 9
37012 Bussolengo (Verona)
Italy

Telephone +39 045 6719000
Fax +39 045 6719380

CE 0123

Your Distributor is:

Deformity Correction | Trauma | Pediatrics | Bone Growth Stimulation

www.orthofix.com

CN-0704-OPT-E0 E-11/11

ORTHOFIX®
Orthopedics International